12/39

Better Homes and Gardens®

WOOD®

THE #1 MAGAZINE FOR HOME WOODWORKERS

DECEMBER 1990 • ISSUE NO. 39
Display until December 18

SANDING SHORTCUTS
Take the hassle out of wood preparation

SHAPERS
What to know before you buy

VENTILATION
Ways to combat harmful vapors

TERRIFIC GIFTS
Building-block castle
Business-card box
Cassette rack
Jewelry case
Cutting board
Santa carving

LOADS-OF-FUN CHILD'S SLEIGH
Page 48

12
14005 14072 2
U.S. $3.95

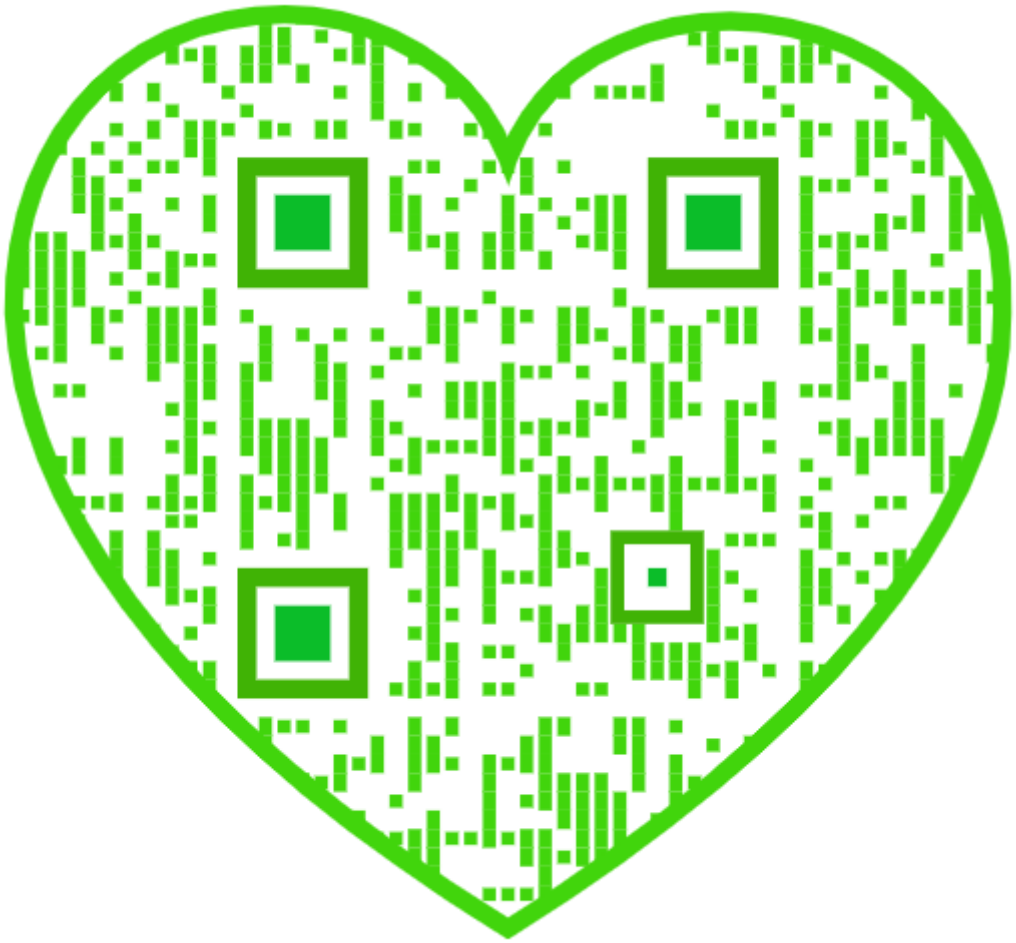

ADDING TO THE TRADITION

DELTA INTRODUCES LESS BLADE FOR YOUR MONEY.

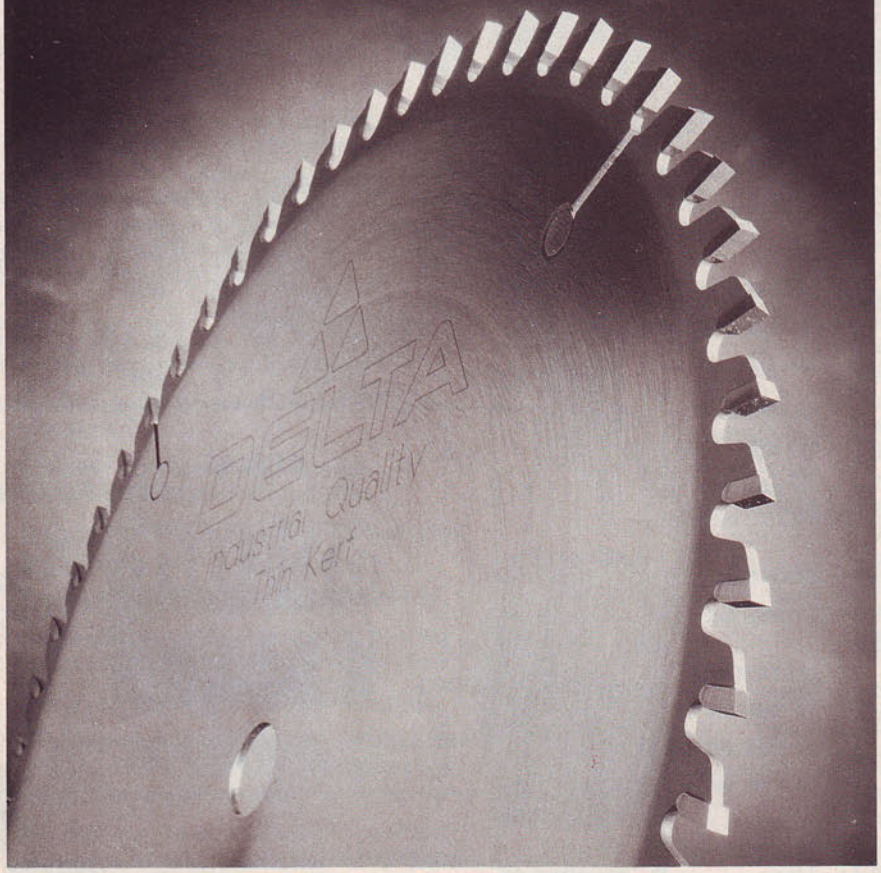

Less blade, less kerf, less waste, less drag on your lower horsepower saws. Less of everything, except quality.

The new Delta thin kerf, industrial carbide-tipped saw blade.

These new blades are 28% thinner than conventional blades with harder bodies and finer carbide than any blade in their class. So stockfeeding is smoother and easier. Less strain on both you and your machine.

Put a Delta thin kerf blade on your saw and if it doesn't perform as well as any you've tried, we'll replace it or refund your money. No questions asked.

Blades come in 8", 10" and 12" diameters. In our popular ATB tooth configuration. Everything you'd expect from Delta.

To learn more about what you can do with less, call toll free for the name of your Delta Distributor: Delta International Machinery Corp., 800/438-2486.

Building On Tradition

DELTA

A Pentair Company

Better Homes and Gardens®

WOOD®

THE #1 MAGAZINE FOR HOME WOODWORKERS

December 1990 • Vol. 7, No. 7 • Issue No. 39

Editorial/Art Staff

Editor **LARRY CLAYTON**
Managing Editor **CARL VOSS**
Art Director **C. L. GATZKE**
Design Editor **JAMES R. DOWNING**
Features Editor **PETER J. STEPHANO**
How-To Editor **MARLEN KEMMET**
Products/Techniques Editor **BILL KRIER**
Project Builder **JAMES E. BOELLING**
Senior Graphic Designer **PERRY A. McFARLIN**
Administrative Assistant **DARLENE REYNOLDS**
Business Office Clerk **MARGARET CLOSNER**
Secretary **ROSEMARIE BURCH**

Technical Consultants: Product Testing **GEORGE GRANSETH;** Products That Perform **STEVE OSWALT;** Wood Technology **PAUL L. McCLURE;** Collectible Tools **PHILIP WHITBY**

Publisher **WILLIAM R. REED**
Advertising Representatives **PAUL DaCRUZ, MARK S. JOSEPHSON, CHRIS W. SCHRAFT**
Promotion/Research Director **EILEEN SULLIVAN**
Marketing Services Manager **NANCY DALY**
Marketing Services Assistant **CORINNE OLESON**
Publisher's Assistant **LORIANN DelCIOPPO**
Sales Secretary **ALICIA SANTANA**
Circulation Director **CLEM SEVDE;** Circulation Manager **ALAN BRUSH;** Newsstand Circulation Director **MICHAEL SENIOR**
Production Director **ROBERT C. FURSTENAU**
Editorial Research Director **C. RAY DEATON**
Public Relations **TIA DIGBY**

Magazine Group Officers

Group President **JAMES A. AUTRY**
Senior Vice President, Publishing Director **ADOLPH AUERBACHER**
Group Vice Presidents: Publishing Directors **MYRNA BLYTH, BURTON H. BOERSMA, CHRISTOPHER M. LEHMAN;** Controller **MAX RUNCIMAN;** Editorial Director **DORIS EBY;** Operations **DEAN PIETERS**

Corporate Officers

Chairman of Executive Committee **E. T. MEREDITH III**
Chairman of the Board **ROBERT A. BURNETT**
President and Chief Executive Officer **JACK D. REHM**
Group Presidents: Book **JERAMY LANIGAN;** Broadcasting **PHILIP A. JONES;** Magazine **JAMES A. AUTRY;** Real Estate **ALLEN SABBAG**

WE CARE!

EDITORIAL MAILING ADDRESS: *WOOD* Magazine, P.O. Box 11454, Des Moines, IA 50336-1454.
SUBSCRIPTION SERVICE (including change of address): *WOOD* Customer Service, P.O. Box 10667, Des Moines, IA 50336-0667.
Please enclose your address label from a recent issue. If you wish to phone, call toll-free 800-678-2666.
ADVERTISING: *WOOD* Magazine Advertising, 750 Third Ave., New York, NY 10017. Phone 212/557-6600, extension 6095.

Better Homes and Gardens® WOOD® — the magazine for home woodworkers (ISSN-0743-894X) is published eight times a year in January, February, April, June, August, September, October, and December by Meredith Corporation, 1716 Locust St., Des Moines, IA 50336. Second-class postage paid at Des Moines, Iowa. Better Homes and Gardens trademark registered in Canada and Australia. Marca Registrada en Mexico. **ONE-YEAR SUBSCRIPTION PRICES:** United States and its possessions, $19.97; Canada, $29; other countries, $38. **POSTMASTER:** Send address changes to WOOD, 1716 Locust St., Des Moines, IA 50336.
©COPYRIGHT MEREDITH CORPORATION 1990. ALL RIGHTS RESERVED. PRINTED IN U.S.A.

Mobile Machine Bases

to put your entire shop on wheels

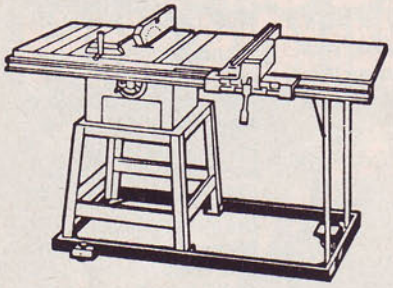

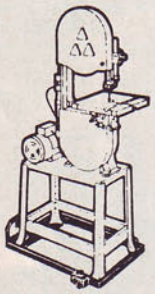

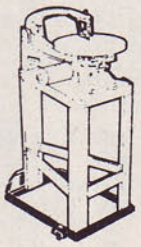

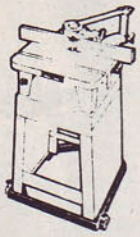

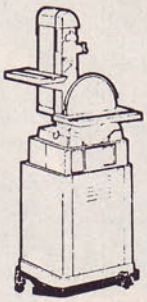

EXPAND WORKING AREA
MAKE CLEAN-UPS A SNAP

- Models available for every type, make & size of machine
- 3 - 2½" ø Wheels for Stability
- Dual wheel locks for Positive Positioning
- Raises machine only ¾"
- All Steel & Precision Welded
- Lifetime Warranty

All Products - Made in America & Available at Better Tool Stores

Free Catalog

HTC Products, Inc.
120 E. Hudson • P.O. Box 839
Royal Oak, Michigan 48068-0839

(313) 399-6185 • **(800) 624-2027**

Better Homes and Gardens®

WOOD®

THE #1 MAGAZINE FOR HOME WOODWORKERS

This issue's cover wood grain: White Pine *Cover photo: John Hetherington*

DECEMBER 1990 ISSUE NO. 39

WOOD PROFILE
Yellow birch: The shimmering queen of the north 33
Long ago, craftsmen discovered birch's strength. This golden-colored wood remains a standard for today's chairs, tables, and cabinets.

HOLIDAY HIGHLIGHTS
Return to the Round Table 36
Come take a closer look at our versatile block castle designed for your little prince or princess.

Taking care of business 40
Make a lasting impression with a wooden business-card holder.

Jewel of a case 42
Distinctive joinery and sensible trays highlight a reader's jewelry box.

A cut above the rest 46
Expect years of service from our patterned end-grain cutting board.

Snow-loving open sleigh 48
Bent runners frighten you? No problem here: A laminating jig simplifies forming runners for this classic sleigh designed in Minnesota.

The three rack-a-tiers 54
Help someone organize video, cassette, and compact-disc collections.

TOOL BUYMANSHIP
Shapers 56
If you constantly test your router table with big projects, a shaper could make sense for your workshop. Find out how much muscle a shaper can deliver.

SHOP-TESTED TECHNIQUES

Sanding shortcuts 62

After you learn how to choose the best abrasive, review the strong points of 13 sanding devices. Then, check out our list of hints.

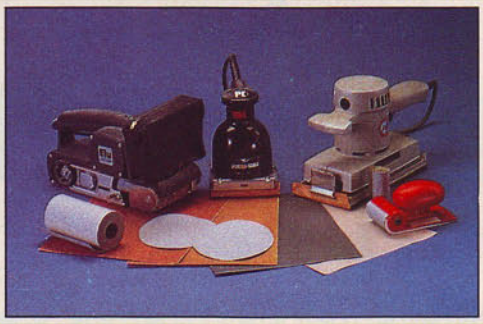

CRAFTSMAN CLOSE-UP

Good wood is worth restorin' 68

Sit in on a visit with Jim Watson and discover how he restores tired furniture. Be sure to save Jim's tips for a successful refinishing project.

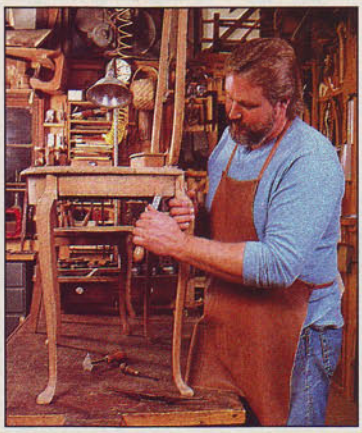

THE ENVIRONMENT

Battling harmful vapors 72

Don't miss this important health article. It will help you identify the culprits in strippers and finishes that irritate eyes, noses, and throats.

Good sports 74

Features editor Pete Stephano tees up with a foursome of sports diversions steeped with a long-standing partnership with wood.

CARVING PATTERN

Carve a Santa 78

Ring in the holiday season with a new carving project of Santa carrying a Christmas goose.

SHORT-SUBJECT FEATURES

Editor's Angle 7
Talking Back 8
Tips from Your Shop (And Ours) 20
Products That Perform . . . 30
Shop Sense 88
Finishing Touches 104

Over 400 WOOD PARTS

Something for Everyone

Toy Builders!

2-3/4" Spoke Wheel	$ 1.00 / EA	$10.00 / 12
1" x 5/16" Wheel	$ 4.00 / 100	$35.00 / 1000
1" x 3/8" Wheel	$ 5.00 / 100	$45.00 / 1000
1-1/2" Wheel	$ 4.00 / 30	$10.00 / 100
2" Wheel	$ 3.10 / 12	$16.00 / 100
Axle Pegs for above	$ 3.50 / 100	$30.00 / 1000
2-3/8" Little Man	$ 1.40 / 7	$12.00 / 100
1" Truck Tire	$ 1.60 / 8	$10.00 / 100
1-1/2" Truck Tire	$ 2.40 / 8	$14.00 / 100
1-5/8" Pickel Barrel	$ 3.00 / 12	$18.00 / 100

Crafters!

1-5/8" Sawtooth Hanger	$ 3.00 / 100	$25.00 / 1000
2-3/4" Sawtooth Hanger	$ 4.50 / 100	$28.00 / 1000
5/8" Picture Hanger	$ 2.00 / 100	$15.00 / 1000
1-7/8" Picture Hanger	$ 4.50 / 100	$35.00 / 1000
3/8" Round Bead	$ 3.25 / 100	$22.50 / 1000
1/2" Round Bead	$ 3.50 / 100	$25.00 / 1000
1/2" x 5/8" Spool	$ 5.00 / 100	$20.00 / 500
5/8" x 3/4" Spool	$ 6.50 / 100	$27.50 / 500
2" Puffed Heart	$ .60 / EA	$12.00 / 25
2-1/2" Puffed Heart	$ .75 / EA	$15.00 / 25
2-1/2" Hen Egg	$12.50 / 25	$45.00 / 100
4-1/4" Goose Egg	$ 3.00 / EA	$30.00 / 12

Woodworkers!

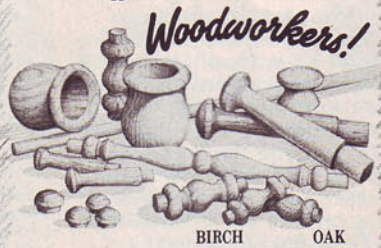

	BIRCH	OAK
1-3/8" Candle Cup	$16.00 / 100	$28.00 / 100
1/4" x 36" Dowel	$18.00 / 100	$25.00 / 100
1-3/4" Shaker Peg	$ 6.00 / 100	$10.00 / 100
3/8" Button	$ 1.50 / 100	$ 2.00 / 100
1/2" Button	$ 1.50 / 100	$ 2.00 / 100
1-1/2" Spindle	$ 8.00 / 100	$12.00 / 100
2" Spindle	$14.00 / 100	$18.00 / 100
5-3/4" Spindle	$ .50 / EA	$ .65 / EA
3-1/2" Shaker Peg	$14.00 / 100	$24.00 / 100
1" Round Knob	$ 4.50 / 25	$ 6.00 / 25

To receive sale prices use Sale #B60

ALL NEW WOOD PARTS CATALOG $1.00

FREE With Order

We accept M/C, VISA, Check, or M.O. All orders add $4.00 Handling. TX add 7% tax. Canada add 30%; Alaska, Hawaii add 15% for freight.

Woodworks

P.O. Box 14507 Ft. Worth, TX 76117

(817) 281-4447

Every workday one tape rule gets taken to the limit by top professionals who rely on their tools.

SOME RULES AREN'T MADE TO BE BROKEN.

And it always comes back for more. Job after job after job. The Mylar® coated, laser tested, Stanley POWERLOCK® tape rule.

The tape rule by which all others are measured.

STANLEY
helps you do things right.

BADGE OF THE PROFESSIONAL® The design of the POWERLOCK® Tape Rule case is a registered trademark of The Stanley Works. © 1990 Stanley Tools, Division of The Stanley Works

TALKING BACK

Continued from page 13

Help!

We have tentative plans to publish the cute toy at *right* from the 1989 Design-A-Toy contest, but we've misplaced the tag identifying the toy designer. Can anyone out there help us? Please come forward and call Marlen Kemmet, how-to editor, at 800-678-2666.

Watch out for imitators

Jim Boelling offered an excellent suggestion in your August 1990 "Products That Peform." The single-flute countersink with the "hole in the head" feature is a wise choice for smooth countersunk holes.

The Weldon Tool Co. of Cleveland, Ohio, patented this countersink configuration. Since the patent expired, there have been a number of imported look-alikes appear on the market. None of these, however, perform as well as the original Weldon countersink.

For the name of your nearest distributor, call the Weldon Tool Co., 216/721-5454.

—Paul Muratet, Tulsa, Okla.

Most countersink bits have a tendency to chatter and wobble when countersinking a hole already drilled. For an easy remedy, countersink the mark first and then drill the hole. This way, the countersink has solid wood at its point and can't vibrate.

—Tom Horton, Agincourt, Ontario

In the groove with dowels

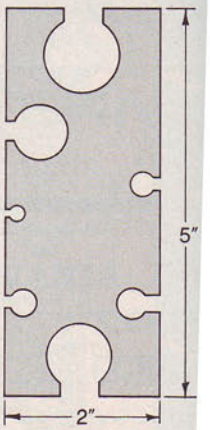

Your idea in the April 1990 issue [page 16] about grooving dowels was very interesting. In fact, so interesting that it gave me the idea for this little jig I made for all sizes of dowels. From scrap, I cut a block of wood 2×2×5" long. Then, I drilled holes ⅛" from the edge of the block to fit different-sized dowels. On the bandsaw, I cut a lengthwise opening about one-third the size of the hole. You can groove any dowel by inserting it in its proper-sized hole. I hope the sample drawing puts my point across.

—Clement Michaud, Chicago

Your idea and your drawing are just fine, Clement. Thanks for the suggestion.

Illustrations: Jim Stevenson

EARN CASH, PRIZES FOR YOUR TOP SHOP TIP

Do you have a great shop tip (or two) you'd like to share with other *WOOD*® magazine readers? For each published submission, you will get at least $25 from *WOOD* magazine (up to $200 if we devote a page or more of space elsewhere in the magazine to your idea). You also may earn a woodworking tool for submitting the top shop tip for the issue.

We try not to use shop tips that have appeared in other magazines, so please send your tip to only one publication. We cannot return shop tips. Mail your tips (a small sketch helps), address, and daytime phone number to:

Top Shop Tip
WOOD Magazine
P.O. Box 11454
Des Moines, IA 50336-1454

TOP SHOP TIP

Tiny plugs make nail holes nearly invisible

You can buy all kinds of fillers for disguising the holes that remain after countersinking finishing nails, but these often leave telltale results.

TIP: From a piece of scrap that matches your work stock, use leather hole punches to cut tiny plugs to match the size of the nail holes. Set the nails slightly below the surface, and dab a little glue into the indentation with a wood sliver or a paper clip. Then, press the plug into place, making sure the grain of the plug matches the workpiece. It takes a sharp eye to spot these plugs.

—Bill Blain, Edmonton, Alberta

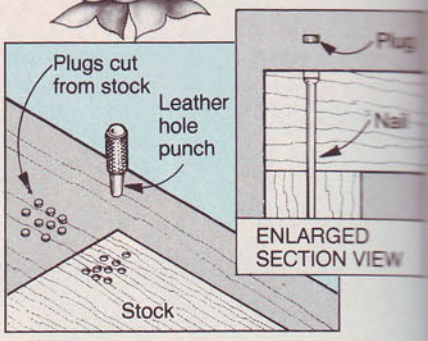

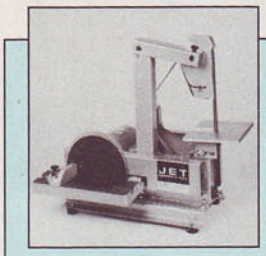

For his tip, Bill receives a Jet model JSG-1 sander.

Jig and templates duplicate irregular shapes

Sometimes, it seems almost impossible to safely and effectively cut several identical irregularly shaped pieces on a tablesaw.

TIP: A simple jig and custom-made templates help you cut tapers or nearly any irregular shape with straight sides. First, build an auxiliary-fence jig of ¾" plywood that allows plenty of clearance above and to the side of the saw blade as shown at *left*. The jig should be as long as the fence. Now, cut a template of the blank to be duplicated, taking extreme care to ensure correct dimensions and angles. Attach this to the workpiece with brads or double-faced tape, and rough-cut the wood material to within ½–1" of the final size. (A bandsaw works well for this task.) Then, with the jig attached to the fence, make the final cuts. For safety's sake, turn off the saw after each cut and clear the scraps to avoid possible kickbacks or binding.

—Mike Jagielo, Almond, Wis.

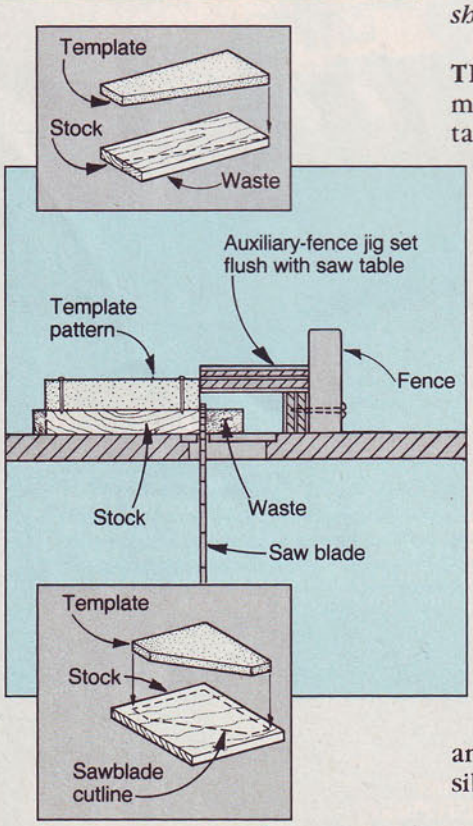

Economy chuck for turning small-diameter stock

If you only occasionally need a small lathe chuck, owning one can be an expensive luxury. Here's a way to make a small chuck for just a couple of bucks.

TIP: Welding two 1" nuts (8 TPI) together makes a great economy chuck for Delta or Rockwell lathes. (For other brands, check the thread size before purchasing the nuts.) First, turn the blank between centers, tapering one end of the stock from 15⁄16" to 13⁄16" as shown *below*. Then, screw the chuck halfway onto the lathe spindle, and screw the tapered end of the workpiece into the available threads of the combination nuts. Now, you can turn a thimble or other small projects.

—Frank Lynn, Kelso, Wa.

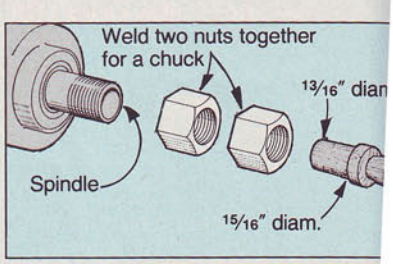

Continued on page

TIPS FROM YOUR SHOP (AND OURS)

Continued from page 20

Picture-hanging jig eliminates guesswork

Hanging a picture can be a hit-and-miss affair when you hold the artwork up to a wall and then guess where to position the hanger.

TIP: Make the simple cross-shaped jig shown at *right* by drilling several ¼" holes about 1" apart in a 1×12" piece of ¼" plywood. Then, cut a ¼"-deep, 1"-wide mortise in the center of a 1×10" scrap of ¾" hardwood. Add a ¾" self-tapping screw about ½" from one end of the ¼"-thick piece.

Now, lay down the ¾"-thick piece mortise-side-up, and place the ¼"-thick piece into the mortise so the screw points up. Fasten together the two pieces with a ¼" nut and 1¼"-long ¼" bolt. Place the bolt in any hole that suits the size of your picture as shown at *right*. With the picture wire draped over the exposed screw point, position the picture on your wall and give the jig a light tap when you find the right spot. The resulting mark from the screw point will tell you exactly where to place the hanger.

—From the **WOOD** *magazine shop*

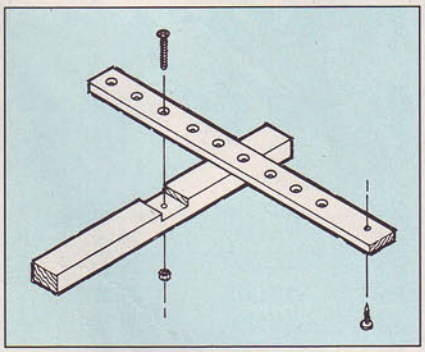

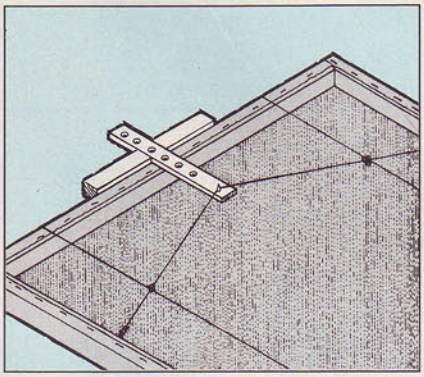

Continued on page 25

© 1990 Dremel, Racine, WI

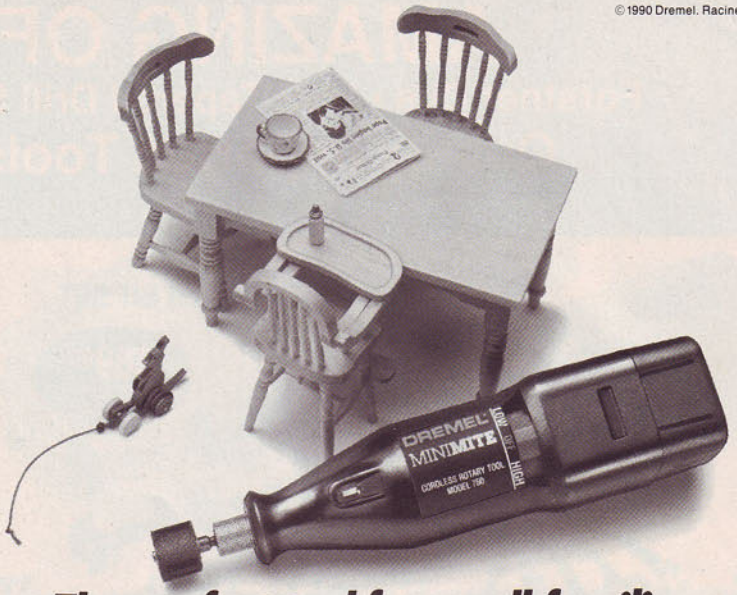

The perfect tool for small families.

Introducing the new MiniMite from Dremel® The smallest cordless power tool with a removable, rechargeable battery pack. It has two speeds and five Dremel bits, including a sander for the hard-to-reach areas of any house.

MINIMITE™

Cordless Rotary Tool from Dremel

WOODWORKER'S CATALOG

There are over 4,000 money saving reasons why woodworkers rely on Constantine.

4,000 woodwork items–to help you Build-Restore-Repair-Refinish! Over 200 different woods ... 150 veneers ... 500 plans ... cabinet hardware ... 96 How-To Books ... 118 carving tools and chisels ... 76 inlay designs ... and lots more for One-Stop, Right-Price Shopping without leaving home!

All in our 116 page, full color catalog—and all yours for only $1.00!

☐ YES, rush, my 1990 Constantine's Woodworker's Catalog. My $1.00 is enclosed.

Send To:

CONSTANTINE Est. 1812
2054D Eastchester Road
Bronx, NY 10461

Name _____

Address _____

City _____ State _____ Zip _____

TIPS FROM YOUR SHOP (AND OURS)

Continued from page 23

Get right to the point for hinge screw holes

Even after careful measuring, you can drill pilot holes for hinge screws that leave hinges and doors slightly out of kilter. Then, both the appearance of the project and the smooth swinging of the door suffer from misalignment.

TIP: From flathead wood screws, make concentric-pointed markers for positioning pilot holes on target. First, tighten a screw into the chuck of your portable electric drill. With a grinding wheel and the drill operating simultaneously, remove the head of the screw as shown in Drawing A *below*. Touch up the newly ground point on the screwhead with a file. After mounting the hinge(s) on the cabinet frame, insert two of these "center finders" into the other half of the hinge, place the door in its correct position as shown in Drawing B, and press it against the hinge to mark the points for drilling pilot holes.

—Gary Paine, Davison, Mich.

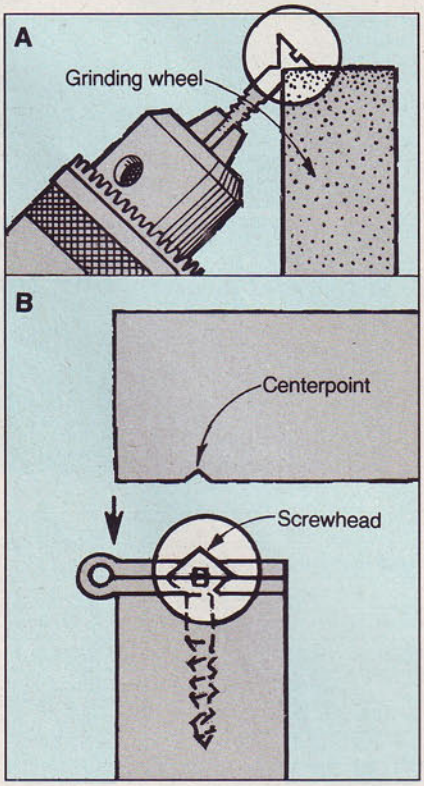

Continued on page 27

© 1990 Dremel, Racine, WI

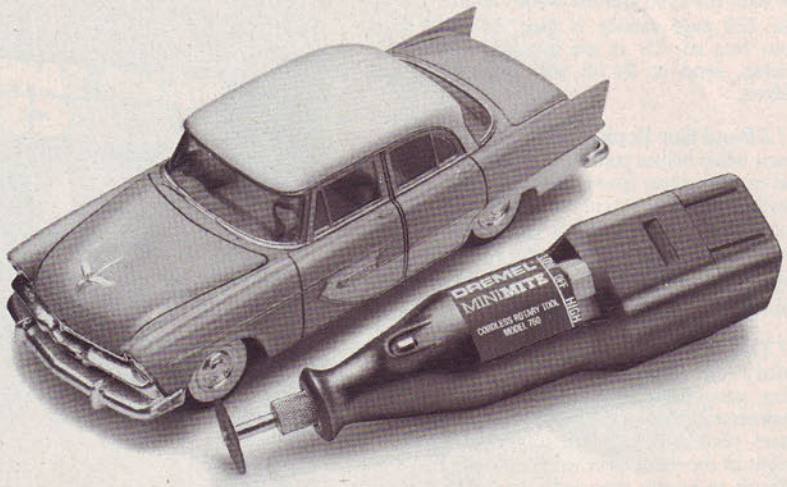

The perfect tool for a downsized Detroit.

Introducing the new MiniMite from Dremel.® A two-speeder that revs 5,000 and 10,000 RPM's. It's the smallest cordless power tool with a removable, rechargeable battery pack. And a model tool for shaping models.

MINIMITE™
Cordless Rotary Tool from Dremel

INTERNATIONAL TOOL CORPORATION
1939 TYLER STREET, HOLLYWOOD, FL 33020

VISA & MASTERCARD ACCEPTED
COD ADD $4.00

1-800-338-3384
(IN FLA 1-800-221-6767)

OPEN MON-FRI, 7AM TO 4PM EST

QUANTITIES LIMITED
PRICES SUBJECT TO CHANGE WITHOUT NOTICE

FAX US YOUR ORDER
1-305-927-0291

VISIT OUR SHOWROOM

PORTER-CABLE 309
LAMINATE TRIMMER
"Back by popular demand!" **$89.00**

7310	5.6 AMP LAMINATE TRIMMER	$85
100	7/8 HP ROUTER	95
314	4 1/2" TRIM SAW	125
330	SPEED BLOCK FIN. SANDER	54
345	SAW BOSS 6" CIRCULAR SAW	99
351	3x21 BELT SANDER	125
361	3x24 BELT SANDER	167
363	4x24 BELT SANDER	179
504	3x24 XHD BELT SANDER	329
505	1/2 SHEET FIN. SANDER	108
555	BISCUIT JOINER	164
621	3/8" VSR DRILL	92
690	1 1/2 HP ROUTER	119
5116	OMNI JIG	263
6931	PLUNGE ROUTER BASE	76
7334	RANDOM ORBIT FIN. SANDER	120
7538	3 1/4 HP PLUNGE ROUTER	238
9118	PORTA-PLANE KIT	185
9637	VAR. SPEED TIGER SAW KIT	134
9647	TIGER CUB RECIP SAW	116
9850	12V CORDLESS DRILL KIT	136
97310	LAMINATE TRIMMER KIT	184
7519	3-1/4 HP SPEEDMATIC ROUTER	224
5556	PLATE JOINER TILT FENCE	39

Milwaukee 6246 JIG SAW **$115**

0228-1	3/8" VSR PISTOL DRILL	$ 97
0234-1	1/2" MAGNUM HOLE SHOOTER	109
0382-1	7.2 V CORDLESS DRILL KIT	91
6012	1/3 SHEET FIN. SANDER	108
6014	1/2 SHEET FIN. SANDER	112
6016	1/4 SHEET FIN. SANDER	47
6140	4 1/2" ANGLE GRINDER	91
6256	TOP HANDLE JIG SAW	123
6365	7 1/4" CIRCULAR SAW	113
6511	2 SPEED SAWZALL W/CASE	124

DELTA 40-150 15" SCROLL SAW **$129**

31-460	4" BELT 6" DISC SANDER	$135
11-950	BENCH TOP DRILL PRESS	134
31-050	1" BELT SANDER	72

BOSCH ROUTER BITS ARE 40% OFF OF LIST PRICES!

BOSTITCH® N80S STICK NAILER 2" -3 1/2" CAPACITY **$394**

T28-5	FINISH STAPLER 1 3/16" CAP	$299
N50FN	FINISH NAILER 1" - 2" CAP	324
N60FN	FINISH NAILER 1" 1/4- 2" 1/2	335
T36-50	STAPLER 16 GAUGE 1/2" CRN	305
MII-812	T-NAILER 9/16-2 1/4"	429

RYOBI T525IU 10" MITER SAW **$169**

JP155	6-1/8" VS JOINTER	$309
W660	7-1/4" CIRCULAR SAW	89
RE600	3HP PLUNGE ROUTER	205
L1323ALS	3 1/4" PLANER KIT LONG SHOE	109
RA200	8" RADIAL ARM SAW	249

HITACHI C8FB 8" COMPOUND MITER SAW **$449.00**

C12FA	12" MITER SAW	$338
TR6	1 1/2 HP PLUNGE ROUTER	117
F20A	3 1/4" PLANER	97
SB-75	3 x 21 BELT SANDER W/BAG	129
SB8T	3 x 24 BELT SANDER W/BAG	139
SV12SA	1/4 SHEET FIN. SANDER	48
DTC10	7.2V 2 SPEED CORDLESS DRILL	79
DRC10	SAME AS ABOVE BUT W/CLUTCH	85
DV10D	CORDLESS HAMMER DRILL	119
D10VC	3/8" VSR DRILL	69
C7SA	7 1/4" CIRCULAR SAW	69

Panasonic Cordless

EY571B	9.6V VS W/KEYLESS CHUCK	$134
EY6206B	12V VS 15 MIN CHRGE KEYLESS	210
EY6200B	12V 2 SPD, 1/2" CHUCK 15 MIN	199

FREE FREIGHT & SAME DAY SHIPPING ON MOST ORDERS

BOSCH 3 1/4 HP VAR. SPEED 1611EVS PLUNGE ROUTER **$225.00**

1158VSR	3/8" VSR DRILL	$ 64
1272	3x24 BELT SANDER	162
1273	4x24 BELT SANDER	167
1273DVS	4x24 BELT SANDER	185
1347A	4 1/2" MINI GRINDER	84
1580VS	VS VAR. ORBIT JIG SAW	99
1581VS	TPO HANDLE JIG SAW VS	129
1601	1 HP ROUTER	95
1604	1 3/4 HP ROUTER	119
1608	LAMINATE TRIMMER	85
1609K	TRIMMER INSTALLERS KIT	159
1611	3 HP PLUNGE ROUTER	195
1651/54	7 1/4" BUILDERS SAW	97
1922K	ORB. CORDLESS JIG SAW KIT	150
3050VSRK	CDLS DRILL 9.6V 2 BAT/CASE	128
3258	3 1/4" PLANER	124

freud JS100 **$158** BISCUIT JOINING MACHINE

FT2000	3 1/4 HP PLUNGE ROUTER	$169
LU72M010	10"x 40T ATB CARBIDE	36
LU82M010	10"x 60T TC CUT OFF CARB	45
LU84M008	8"x 40T ATB COMBO CARBIDE	38
LU84M011	10"x 59T ATB COMBO CARBIDE	41
LU85M010	10"x 80T ATB CUT OFF CARB	56
LU85M014	14"x 108T ATB CUT OFF CARB	97
LM72M010	10"x 24T ATB RIPPING CARB	37
LU73M010	10"x 60T ATB CUT OFF CARB	43
LU87M010	10"x 24T THIN KERF RIP	39
LU88M010	10"x 60T THIN KERF CROSSCUT	46
LU89M010	10"x 72T TC NON FERROUS	64
LU98M010	10"x 80T TCG SUPERIOR	69
LU78M010	10"x 80T ATB CROSSCUT	69
TK206	10"x 24T ATB	20
TK306	10"x 40T ATB	25
TK906	10"x 50T COMBO	27
PS203	7 1/4"x 24T ATB CARBIDE	19
PS303	7 1/4"x 40T ATB CUTOFF	23
DS308	8"x 18T DADO SET CARBIDE	107
WC104	4 PIECE CHISEL SET	39
WC106	6 PIECE CHISEL SET	52
WC110	10 PIECE CHISEL SET	79
DB107	7PC BRAD POINT SET	16
CS106	6PC CARVING SET	73
CS112	12 PC CARVING SET	129
FRT2000	ROUTER TABLE	169
EB100	EDGE BANDING SYSTEM	229
FB-107	7 PC FORSTNER BIT SET	49

TIPS FROM YOUR SHOP (AND OURS)

Continued from page 25

Saw a wooden sphere in half with accuracy

Occasionally, a plan calls for sawing a wooden ball in half. Such is the case for a rocking horse that uses two birch half-balls for eyes.

TIP: In one end of a length of 2×4, bore a hole 1/16" smaller than the diameter of the ball and to a depth that's three-fourths the diameter of the ball. Also, cut a kerf into the block as shown, centered on the hole for the ball. Force the ball into the hole and cut. *(NOTE: The ball must fit snugly into the jig for a safe, accurate cut.)*

Afterwards, shut off the saw, allow the blade to stop, and remove the two halves.

—Henry E. Coleman, Anaheim, Calif.

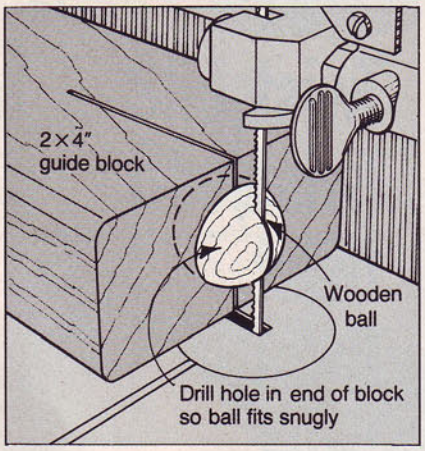

MORE TIPS FROM OUR WOODWORKING PROS

- If you like exposed joinery, then you'll find many uses for the V-block jig on page 43.
- Follow the box-lid method on page 44 to make lids or doors for other boxes with curved interiors.
- Even if you don't build the sleigh featured on the cover, check out our process for bending wood on page 49.
- For ten tips on furniture restoration, see the boxed information on pages 70 and 71.
- Find out how to add a centuries-old look to wood by using shoe polish. See page 78.

© 1990 Dremel, Racine, WI

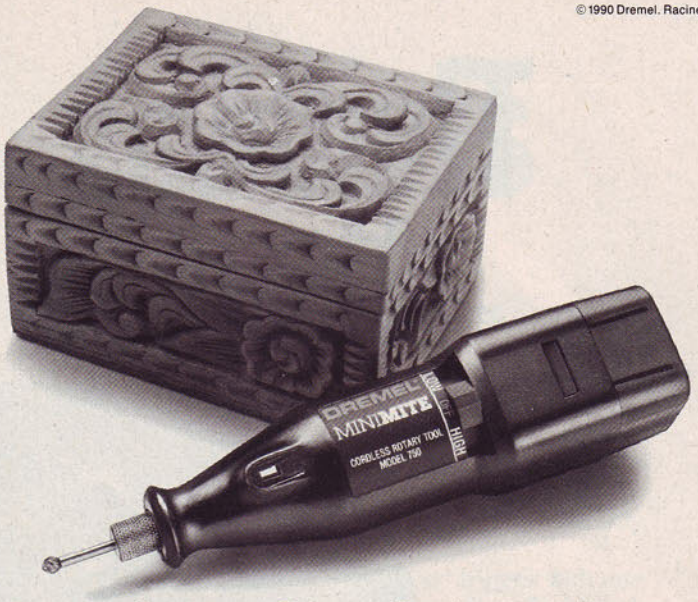

The perfect tool for a little gardening.

Introducing the new MiniMite from Dremel® The smallest cordless power tool with a removable, rechargeable battery pack. It has 2 speeds for precision detailing. And takes the thorns out of intricate refinishing jobs.

MINIMITE™
Cordless Rotary Tool from Dremel

K5 WOOD MACHINING CENTER

The Basics of Cabinetry

Table Saw – 2-3/8" Depth of Cut
• Precise Mitering System
• Optional Box Joint System
• Self-Aligning Rip Fence
Spindle Shaper – 4-5/8" Max. Cutter
• Capable of Raised Panel Construction
• Standard Ring Fence for Curved Work
• Sanding and Tenoning Options
Jointer – 5-7/8" Max. Width
• Smooth Face Planing
• Accuarate Edge Jointing
• Fence Adjusts to 45°
Thickness Planer – 5-7/8" x 4"
• Power Feed - 29 Feet Per Minute
• Dimension Stock From 4" to 1/8"
• Maximum Cut 1/8" Per Pass
Slot Mortiser – 1/2" Max. Mortise
• Simple Set-up & Adjustment
• Cuts to the Center of 4" Stock
• Precision Horizontal Boring

Whether you're building toys for your grandchildren, creating custom furniture, running a framing shop or trimming homes, you just can't find a better answer for your machinery needs than the K-5.

Portable, accurate, dependable --- Perfect results from start to finish. Let us show you how you can put more fun in your hobby or more money in your pocket -- or both! -- with a K-5.

Call or Write For Free Information Kit Or...Order Our Video Demonstration

1-800-USA-KITY

Name_____

Address_____

City_____ State____ ZIP____

☐ Please Send Free Information Kit Including Details on Your 30-Day Free Trial Guarantee and 2-Year Warranty

☐ $14.95 Enclosed. Please Send Video Pack Including FREE Desk Plans and $25.00 Gift Certificate

KITY FARRIS MACHINERY
WOODWORKING MACHINES

Farris Machinery Dpt. A690
320 N. 11th St.
Blue Springs, MO 64015

THE #1 MAGAZINE FOR HOME WOODWORKERS
DECEMBER WOOD® 1990

Yellow BIRCH

The shimmering queen of the north

There's no sight in the woods that quite compares to a stand of yellow birch. The bronze-barked trees glisten against their neighbors. Light bounces off them, as if reflected from metal.

The beauty of yellow birch on the stump probably captivated colonial New England craftsmen, too. But, it was the tree's strong, golden wood that they treasured. From it, they expertly crafted Windsor-style chairs, tables, and other furniture to withstand decades of use and abuse. Centuries later—at the peak of this wood's popularity in the 1950s—homes across the nation featured sturdy, blonde cabinets of yellow birch.

Wood identification

Yellow birch (*Betula alleghaniensis*), also called silver birch and swamp birch, is one of 50 species of birch found around the world. Situated in a wide range across the northern U.S. and Canada, yellow birch grows best in rich, moist woodlands by rivers and streams.

Easily recognized by its metallic-looking bark with numerous papery curls and strips, the forest-grown yellow birch attains 60–70′ heights and 3′ diameters.

Before leaves appear in the spring, twigs bear brown buds and branch ends boast two or three catkins containing pollen. By summer, the buds develop into toothed and pointed leaves measuring about 3–4″ long.

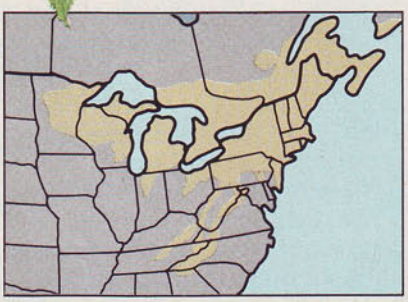

Natural range

Along the branches, small cones with seeds inside appear, only to drop off in the fall.

What little sapwood you find in yellow birch will be nearly white, while heartwood has an array of color. The wood varies from cream to golden tan to light walnut. Some wood may even have gray and red tinges.

Although birch has a distinct grain pattern—sometimes displaying waves or curls—the fine-textured wood doesn't always overpower the eye. And, at 43 pounds per cubic foot dry, it weighs almost the same as sugar maple, although it's not as hard.

Uses in woodworking

Along with maple, yellow birch has always been a standard for items that get lots of use—chairs, tables, desks, and cabinets. And, it often turns up as doors and moldings as well as floors.

Many of the turned products sold in homecenters are yellow birch. It's also used for dowels, dowel pins, screw-hole buttons and plugs, and shaker pegs.

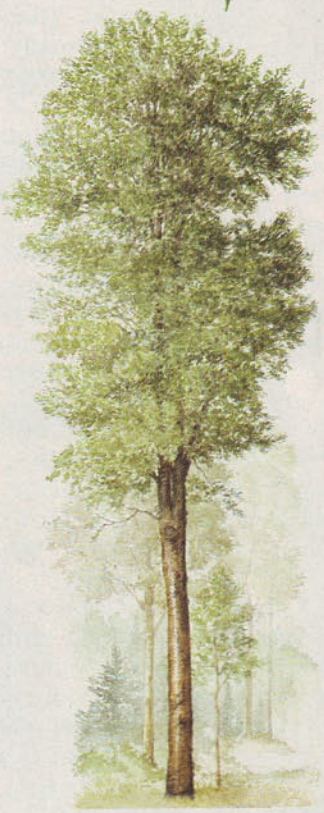

Availability

Yellow birch lumber usually sells for less than $2 per board foot, and, except on the West Coast, should be readily available. Stock from the northern part of its range is harder, has fewer defects, and stains better.

Although you normally won't find lumber with much sapwood, manufacturers of rotary cut yellow birch veneer make the distinction. It's offered as "natural," including heartwood and sapwood, and "select white," from sapwood. Plywood sells for about $50 per sheet.

Continued

PERFORMANCE PROFILE

yellow birch
(Betula alleghaniensis)

Plain yellow birch

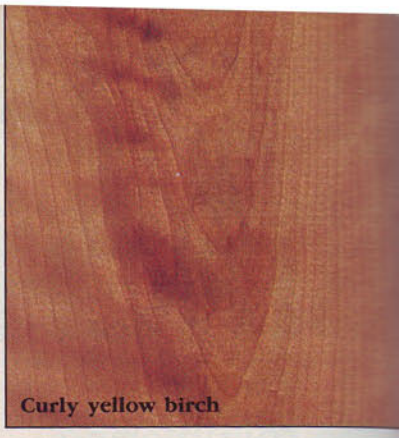
Curly yellow birch

Machining methods

Yellow birch machines a little easier than maple, a wood with similar characteristics. That's because yellow birch normally has a finer, more even grain than maple. However, it does have a moderate dulling effect on cutting edges that requires carbide tips. *When yellow birch does misbehave, here's what to do:*

- The wood planes smoothly 90 percent of the time. However, spinning cutters, as on a planer, sometimes catch wavy grain and tear out a pockmark. When this occurs, try reversing the board and taking a shallower cut.
- Yellow birch normally joints cleanly, but trying to decide grain direction to determine feed sometimes can be impossible. When in doubt as to feed direction, set table height for cuts of 1/16" to 1/8" and decide by trial and error.
- Nearly as dense as maple, yellow birch requires ripping with a rip-profile blade of 24 teeth or fewer to avoid clogging. A steady feed rate reduces burning.
- In crosscutting, steel fine-toothed plywood blades work well to avoid splintering. Today's thinly veneered birch plywood splinters easily, too. Score the line to be cut or place masking tape on the kerf line and saw right through it.
- Back drill bits out frequently to clear the hole and avoid burning, especially in end grain.
- Use router bits with ballbearing pilots to avoid burning, and, if possible, rout slowly. Cross-grain cuts require shallow passes.
- Beware of squeeze-out when gluing. Dry glue, when scraped off, can grab the wood and tear it away. To detect squeeze-out, wipe the wood with paint thinner. And, don't let clamps contact squeeze-out—black stains result.
- Wipe yellow birch with a damp cloth to raise grain prior to staining or clear-finishing. Sand, then stain. When grain has a differing color or pattern, expect uneven staining, or first prepare the surface with a product such as Minwax Wood Conditioner.

Carving comments

- Yellow birch, although ha does take fine detail and has place in relief work. It requi special handling, however.
- Gouge bevels (15° to 20°) c quickly. Keep a sharp edge wit 10° bevel on the *back side*.
- Wavy grain will be more di cult to carve because the wavy eas will be harder than the pla
- Power carvers should not be with coarse-cutting burrs—t wood splinters. Use medium- burrs, then follow with finer on

Turning tips

Yellow birch couldn't be easier turn with sharp tools, aside fr these exceptions:

- Scraping can produce splinte
- Sanding the wood on the la across grain produces scratch Instead, wipe with a damp cl then stop the lathe and sand w the grain using fine paper.

SHOP-TESTED TECHNIQUES THAT ALWAYS WORK

Any exceptions, and special tips pertaining to this issue's featured wood species, appear under headings elsewhere on this page.

- For stability in use, always work wood with a maximum moisture content of 8 percent.
- Feed straight-grained wood into planer knives at a 90° angle. To avoid tearing, feed wood with figured or twisted grain at a slight angle (about 15°), and take shallow cuts of about 1/32".
- For clean cuts, rip with a rip-profile blade that has 24–32 teeth. For crosscutting, use a blade with about 40 teeth.
- Avoid drilling with twist drills. They tend to wander and cause breakout. Use a backing board under the workpiece.
- Drill pilot holes for screws.
- Rout with sharp, preferably carbide-tipped, bits and take shallow passes to avoid burning.
- Carving hardwoods generally means shallow gouge bevels—15° to 20°—and shallow cuts.

YELLOW BIRCH AT A GLAN

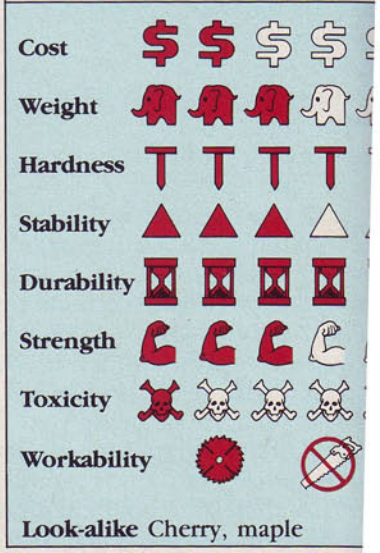

Look-alike Cherry, maple

Compiled with woodworkers Jim Boelling, George Granseth, Else Bigton, and carver Phil Odden

Illustrations: Steve Sch

HOLIDAY HIGHLIGHTS

For gifts sure to be remembered long after the holdiay season, check out our distinctive handcrafted projects.

Retur

A BUILDIN

When Christmastim rolled around last year, wasn't sure a made-in-th woodshop castle woul stand a chance against c lebrity dolls and sle plastic toys. But, m two young daugh ters, with their a tive imaginations have since rea sured m They've spe so much time building and r building castle after castle th several other Christmas gifts c little more than gather dust.

Marlen Kemm
How-to Edit

Note: *We cut all the castle pieces from 2×4 and 2×6 clear-heart redwood. Pine or fir also would work.*

Let's cut some parts to get this kingdom off the ground

1 Cut parts A, B, and C to the sizes listed in the Bill of Materials. Using the Parts View Drawing for reference, mark a 1½" radius with a compass, centered along the bottom edge of part C. Bandsaw the radiused opening to shape, and save the cutout.

2 Cut a piece of 1½"-thick stock to 3½×3½". Mark a diagonal from one corner to another, and bandsaw the block into two triangles for parts D. Repeat the process with a 3½×5¼" block for parts E.

3 Cut part F to size. Lay out the radiused opening, bandsaw it to shape, and save the cutout. Mark the angled roof lines and bandsaw them to shape.

Less than a knight needed to dado the notches and grooves

1 Cut parts G, H, I, and J to the sizes listed in the Bill of Materials. Cut parts K and L to the thickness and width listed plus 3" in length. Parts K and L are cut extra long for safety when cutting the dadoes in the next step.

2 Attach a wooden fence to yo miter gauge and a ½" dado bla to your tablesaw. Cut the ¾"-de dadoes in parts G through where shown on the Parts Vie Drawing and as shown in t photo *below.* (We used a st block to position and support t pieces when making the cuts.)

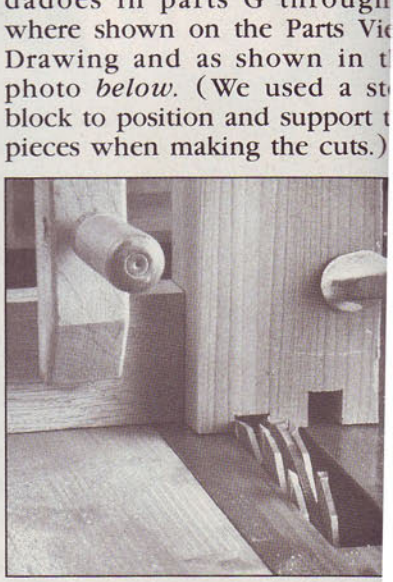

Clamp the castle piece to an auxil fence fastened to your miter ga when cutting the dadoes.

to the Round Table

BLOCK CASTLE FOR YOUR LITTLE PRINCE OR PRINCESS

Angle-cut the ends of a 12" length of 1½" square stock to form the pointed ends on each part H. For safety, we started with an extra-long piece.

3 Cut ½" dadoes ¾" deep, centered in the ends of parts H through L, as shown *below*. Crosscut parts K and L to the length listed in the Bill of Materials.

4 Using a compass, mark the radius and cut the opening in part H to shape. Save the cutout.

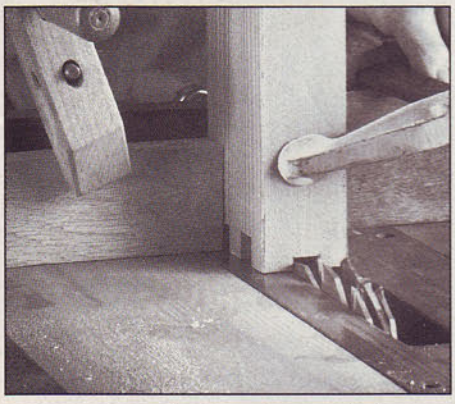

Determine the location, and clamp a stop block to your miter-gauge fence to position and support the castle pieces when machining the centered dado.

Cut a few more parts, and let the fun begin

1 Cut parts M, N, and O to size.

2 To form the pointed ends on parts P, start by cutting a piece 1½" square by 12" long. Then, tilt your tablesaw blade 45° from vertical. Using your miter gauge with a stop block clamped in place, cut the pointed ends on each end of the 12"-long piece as shown in the photo *above*. Crosscut two Ps to length from the 12"-long piece.

3 For parts Q, cut a piece of 1½"-square stock to 6" long. Bevel-cut both ends to the shape shown on the Parts View Drawing. Trim one part Q from each end of the 6"-long piece.

4 To make the staircases (R, S), crosscut a 2×4 to 12" long. Using a combination square, mark ¼ × ¼" steps on part R and ¼ × ⅜" steps on part S where shown on the Parts View Drawing. Bandsaw each to shape.

Bill of Materials

Part	Finished Size* T	W	L	Material	Qty.
A	1½"	3½"	5"	redwood	4
B	1½"	3½"	3½"	redwood	4
C	1½"	3½"	5"	redwood	1
D*	1½"	3½"	3½"	redwood	2
E*	1½"	3½"	5¼"	redwood	2
F	1½"	2½"	5"	redwood	1
G	1½"	3½"	5"	redwood	6
H	1½"	2½"	5"	redwood	1
I	1½"	2½"	2½"	redwood	2
J	1½"	1½"	6"	redwood	4
K*	1½"	1½"	3½"	redwood	4
L*	1½"	1½"	2"	redwood	4
M	1½"	1½"	6"	redwood	4
N	1½"	1½"	3½"	redwood	6
O	1½"	1½"	2½"	redwood	4
P*	1½"	1½"	3½"	redwood	2
Q*	1½"	1½"	1¼"	redwood	2
R*	1½"	3½"	3½"	redwood	1
S*	1½"	3½"	5¼"	redwood	1

*Initially cut parts marked with an * oversized. Then, trim each to finished size according to the how-to instructions.

5 Sand all the pieces (we used a palm sander and sanded each piece with 100- and 150-grit paper, forming a slight round-over on all edges). Use a drum sander for the radiused openings. If desired, apply a finish (we left ours unstained and unfinished).

Produced by Marlen Kemmet
Project Design: Donald "Sandy" McNab, McNab Puzzles/Designs, Sanger, Calif.
Photographs: Hopkins Associates; John Hetherington
Illustrations: Kim Downing; Bill Zaun

Continued

Building-block castle

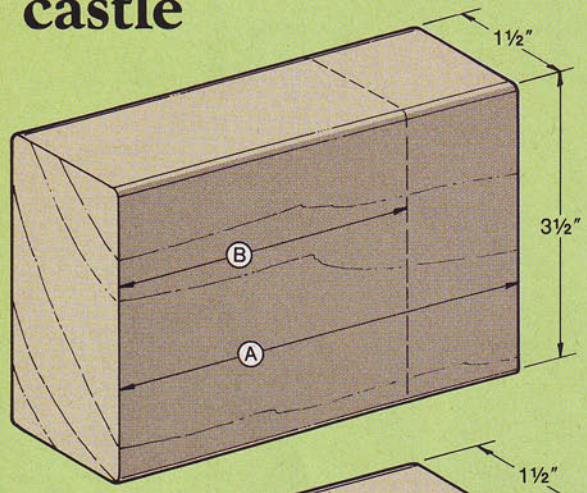

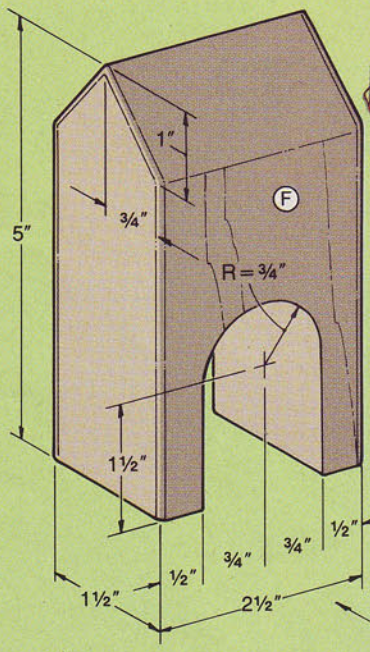

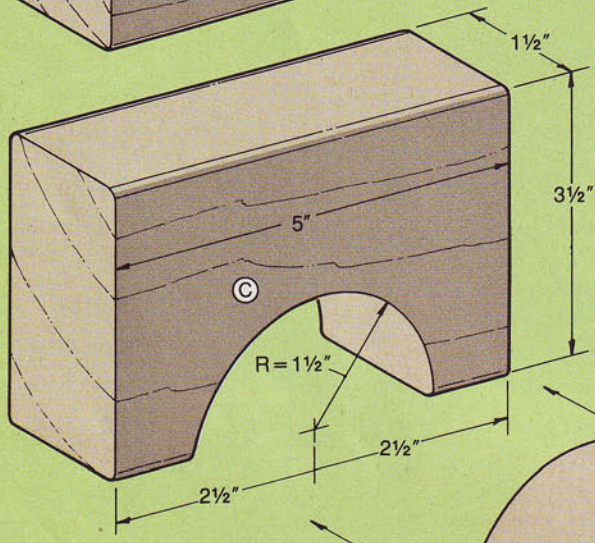

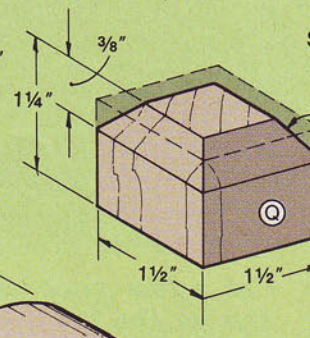

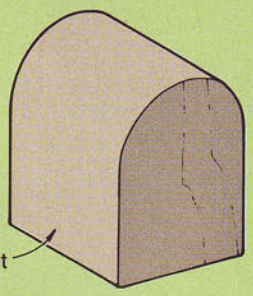

Cut all four sides at a 45° angle

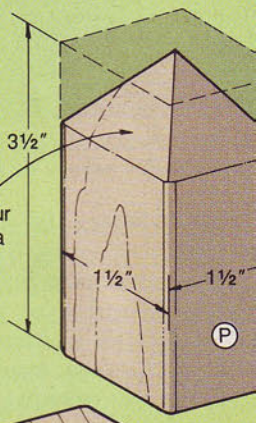

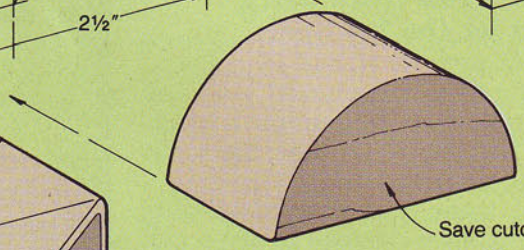

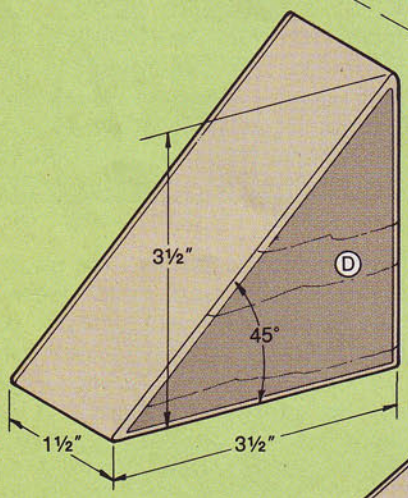

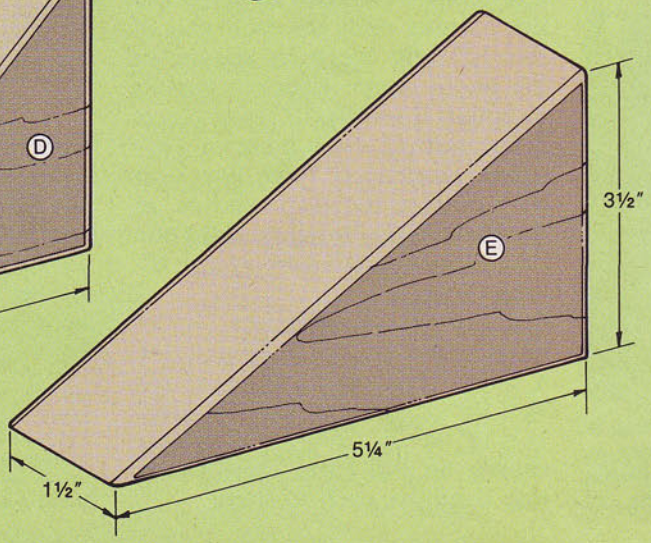

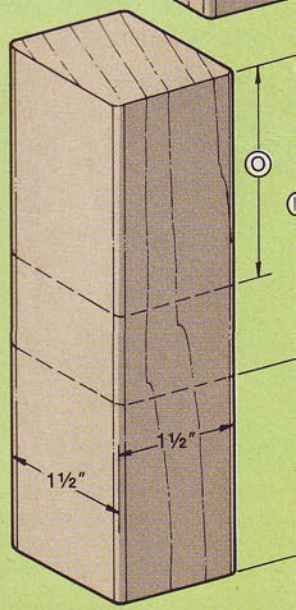

Buying Gu

• Storage ba

Primary-colo nylon net bags (se three; sorry, they don't them separately), w drawstring tops. C 32×22" and two 22× Catalog no. 227541, $1 ppd. Lillian Vernon, 51 Fulton Ave., Mount non, NY 10550.

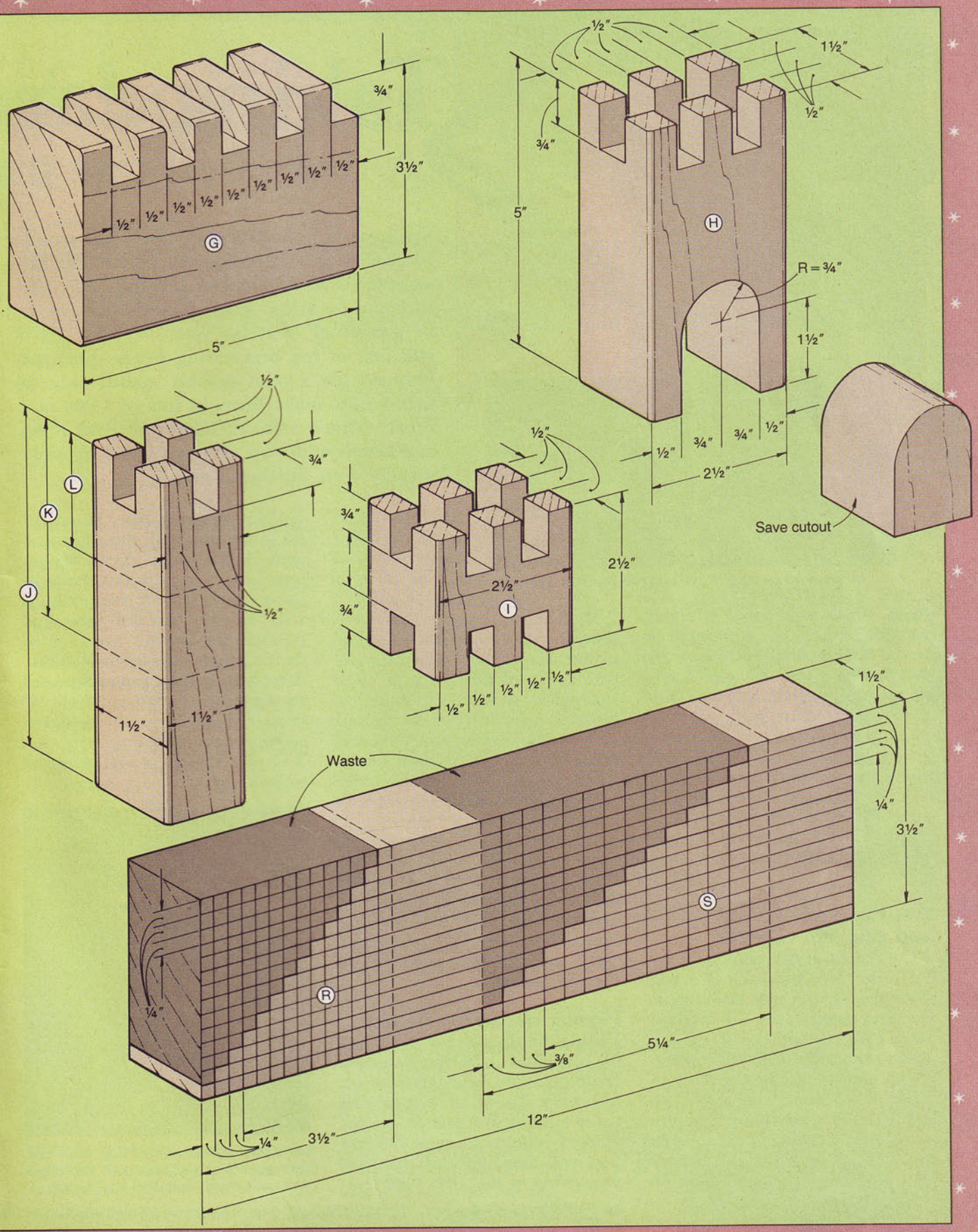

G
3/4"
3 1/2"
1/2"
5"
H
1/2"
1 1/2"
3/4"
5"
R = 3/4"
1 1/2"
2 1/2"
Save cutout
J
K
L
1/2"
3/4"
1 1/2"
I
2 1/2"
Waste
S
R
1/4"
3 1/2"
5 1/4"
3/8"
12"

Taking care

A clever card case that

Closed for carrying

Fully opened for display

Business is booming for Wisconsin woodworker Michael Mikutowski. When Mike designed his first business-card case in 1986, little did he know that it would continue to be a popular item for years to come. "It's still one of my best-selling items—perhaps because it's a neat display stand, too. In fact, I now make them in lots of 1,000 at a time." That's a lot of business! Fold it up and take it with you, or open it and proudly display your business cards.

Note: *You'll need some ⅛" stock for this project. You can plane or resaw thicker stock to size, or see the Buying Guide for our source of morado, sometimes call Bolivian rosewood. If you resaw or plane your own stock, let it sit a couple of days to see if it cups. The stock you use must remain flat.*

Also, business cards vary in size. We built our holder for a 2⅛x3½" card. Adjust the size of the holder to fit your cards.

Cut the parts and glue 'em together

1 Cut the lid hinge parts (A), top (B), tray front and back (C), tray bottom (D), and tray sides (E) to the sizes listed in the Bill of Materials. (We cut the pieces on our tablesaw using a thin-kerf blade.) If you use the Buying Guide to order stock (enough for four boxes), see the Cutting Diagram for minimum waste. (We found it safer to cut the the narrow parts first. Also, we clamped a stop on our radial-arm saw fence to ensure consistent lengths of parts A, B, C, and D.)

2 With the edges and ends flush, glue the lid-hinge parts (A) together face to face. (For ease and quickness of assembly of such small parts, we used gap-filling cyanoacrylate adhesive—instant glue—to bond the parts. Cyanoacrylate is available at most hobby shops. To clamp the tiny lid-hinge parts together, we used ordinary wooden clothespins.)

3 To form the lid, glue the lid hinge (A) flush with the back edge and ends of the lid top (B).

4 To form the tray, glue the front and back pieces (C) to the tray bottom (D). Keep the ends flush. Then, glue the tray sides (E) to the tray assembly.

Pinning the lid to the tray

1 Using the Hole Detail at *far right* for reference, mark the hinge-pin centerpoint on both ends of the tray sides. Using an awl or nail, make a slight indentation at each marked centerpoint. The indentation will keep the drill bit from wandering in the next step.

2 Using masking tape, fasten the lid to the tray with the edges and ends flush. Lightly clamp the assembly in a handscrew clamp as shown in the photo *below*. Chuck a 1/16" bit into your drill press, and position the tray/lid assembly so the bit aligns directly over the indented hinge-pin centerpoint on the tray side. Drill a 1/16" hole ½" deep in both ends of the holder as shown in the photo.

3 Cut two pieces of 1/16" brass rod to 9/16" long.

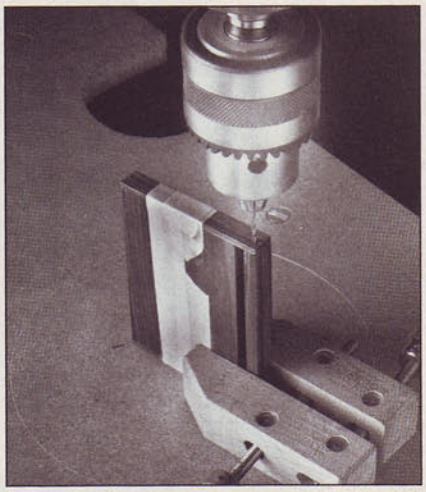

Mark the location of the hinge pins, tape the assemblies together with the edges and ends flush, and drill 1/16" holes.

Produced by Marlen Kemmet Project Design: Michael Mikutowski, Mikutowski Woodworking

e of business

at doubles as a display stand

Cutting Diagram (Enough for four cases)

1/8 × 4 1/2 × 32" Morado

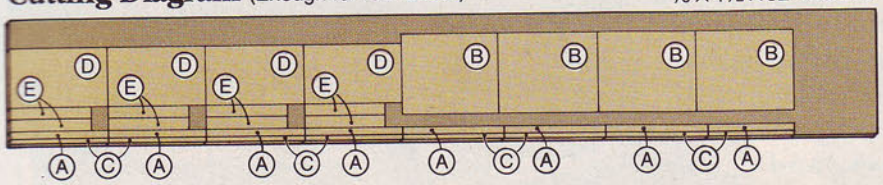

Bill of Materials						
Part		Finished Size T	W	L	Matl.	Qty.
A	lid hinge	1/4"	5/16"	3 5/8"	LM	1
B	lid top	1/8"	3"	3 5/8"	M	1
C	tray back & front	1/8"	3/16"	3 5/8"	M	2
D	tray bottom	1/8"	2 1/2"	3 5/8"	M	1
E	tray sides	1/8"	7/16"	3"	M	2

Material Key: LM-laminated morado, M-morado

Supplies: 1/16" brass rod, finish.

4 Remove the tape to separate the lid from the tray. Using the pointed end of a pin or toothpick, put a small amount of instant glue into each 1/16" hole in the lid hinge (A). Insert the pins through the tray sides (E) and into the lid hinge to pin the lid to the tray sides. Sand the ends of the brass pins flush with the surface of the tray sides.

Add the finger recess, round-overs, and finish

1 Sand all surfaces and ends flush. Close the lid, and sand or rout 1/8" round-overs along the outside edges of the case.

2 Measure in 1 5/8" from the inside surface of both E's, and mark a pair of lines on the tray front (C) to locate the finger recess where shown on the drawing. Wrap 150-grit sandpaper around a 3/8" dowel, and sand between the lines to form the finger recess. (The size of the recess depends on personal preference. For those with small fingers, a shallow recess was sufficient. We recommend a deeper and wider recess for someone with larger fingers.)

3 Finish-sand the holder (inside and out) and apply the finish of your choice, rubbing lightly with steel wool between coats. To help prevent warping, apply an equal number of coats to the inside and outside surfaces.

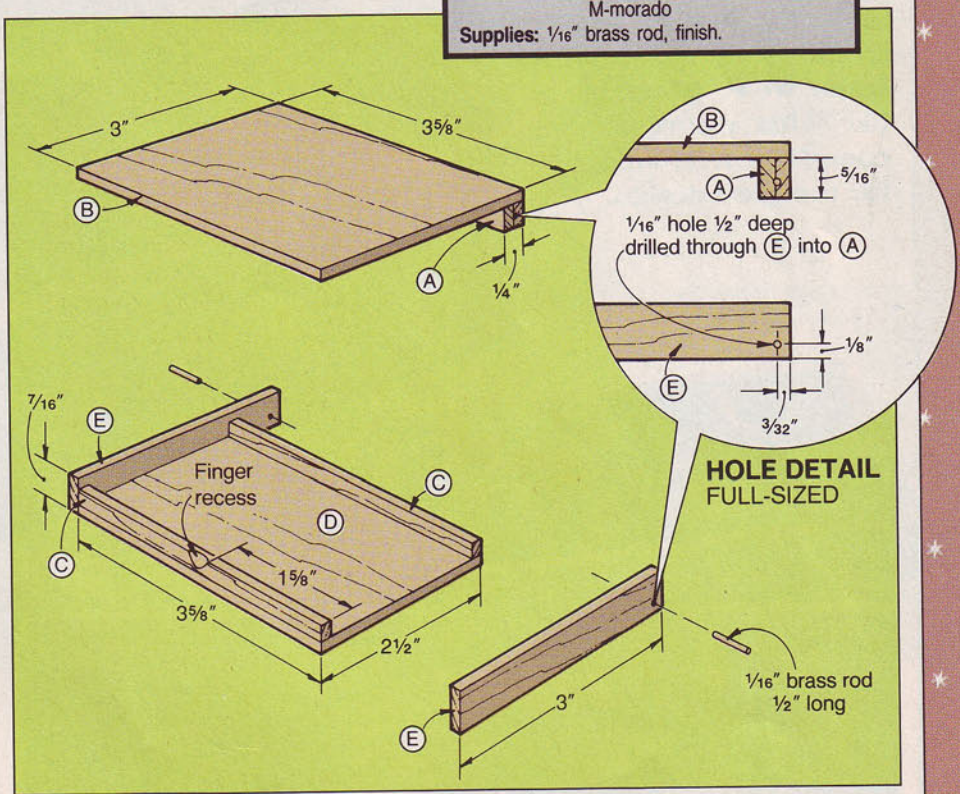

Buying Guide

● **Exotic wood.** 1/8 × 4 1/2 × 32" morado (enough for four boxes), $7.95 ppd for one piece, two pieces for $12.95 ppd, or three pieces for $16.95 ppd. Add $1 for a 6" length of 1/16" solid brass rod (for the hinges) or $2 for a 12" length of rod. Woodworkers' Dream, 510 Sycamore Street, Box 329, Nazareth, PA 18064, or call 215/759-2837.

Photographs: Hopkins Associates; John Hetherington Illustrations: Kim Downing; Bill Zaun

working

Jewel of a case

Daryl Morgan, a woodworker from Waterloo, Iowa, studied plenty of jewelry boxes before designing this one. "I saw lots of pretty boxes with little emphasis on function," Daryl said. "When designing my box, I incorporated simple Scandanavian-style lines, and then added two sliding trays to make the best of the available space." Well, Daryl, all the ladies we've talked to like what you've accomplished. Thanks for the great design.

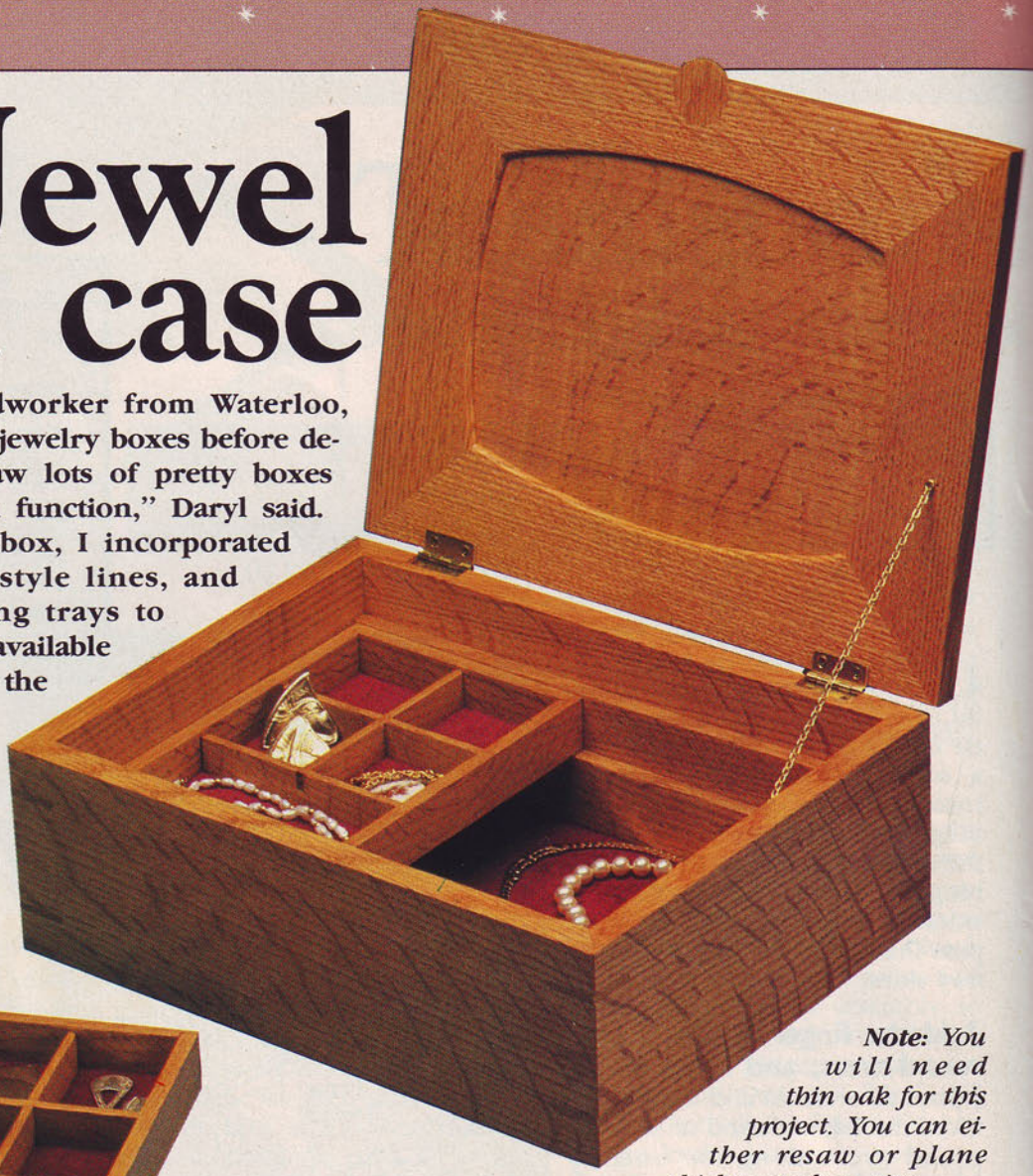

***Note:** You will need thin oak for this project. You can either resaw or plane thicker stock to size.*

Eight splines make for a sturdy box

1 Cut a piece of ½"-thick oak to 3½" wide by 42" long for the front, back, and ends. Cut a ¼" rabbet ¼" deep along one edge.

2 Square your miter gauge to your saw blade, and then tilt the blade 45° from vertical. Cut scrap to verify the angle setting. Now, miter-cut the front and back (A) and ends (B) to the lengths listed in the Bill of Materials from the 42"-long piece.

3 Sand the inside face of each piece (A, B). Next, glue and clamp together the pieces, checking for square and making sure that the top and bottom edges remain flush.

Bill of Materials

Parts		Finished Size* T	W	L	Matl.	Qty.
BOX AND DRAWER SUPPORTS						
A*	front & back	½"	3½"	11"	O	2
B*	ends	½"	3½"	8½"	O	2
C	bottom	⅛"	8"	10½"	H	1
D	top dwr. support	¼"	2¼"	10"	O	2
E	btm dwr. support	¼"	1¼"	10"	O	2
LID						
F*	front & back	½"	2"	11"	O	2
G*	ends	½"	2"	8½"	O	2
H*	panel	¼"	5 15/16"	8 7/16"	EO	1
TRAYS						
I	ends	¼"	⅞"	4¼"	O	4
J	front & back	¼"	⅞"	7 7/16	O	2
K	bottom	⅛"	4¼"	7 3/16"	H	1
L	divider	⅛"	⅝"	4"	O	5
M	divider	⅛"	⅝"	6 15/16"	O	1
N	front & back	¼"	⅞"	6 15/16"	O	2
O	bottom	⅛"	4¼"	6 11/16"	H	1
P	divider	⅛"	⅝"	3⅞"	O	1

*Initially cut parts marked with an * oversized. Then, trim each to the finished size according to the how-to instructions.

Material Key: O—oak, EO—edge-joined oak, H—hardboard

Supplies: ¾×1" brass broad hinges (Stanley CD5302), ½"×17 finish nails, velour fabric, spray-on adhesive or carpet tape, necklace chain, 2—⅜" brass brads, stain, finish.

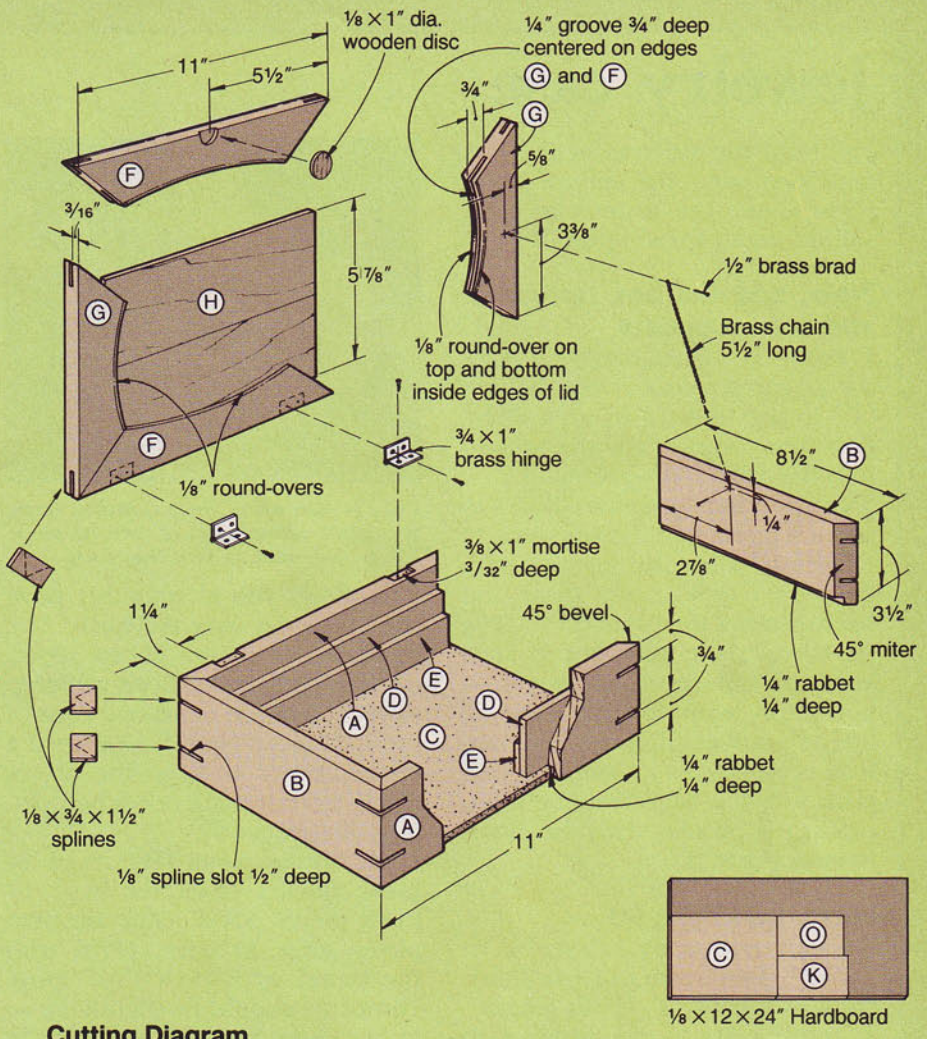

Cutting Diagram

*Plane or resaw to thickness stated in Bill of Materials

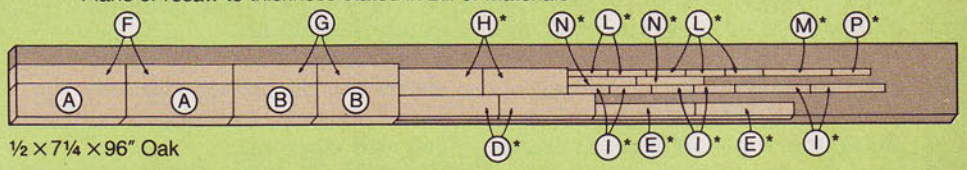

4 Using the drawing at *right* as a guide, build a V-block jig. Now, raise the tablesaw blade 1½" above the surface of the saw table. Position the fence 1" from the inside edge of the saw blade and cut a pair of slots in each corner of the mitered box as shown in the photo at *far right*.

5 To form the splines, cut a piece of ⅛" stock (we resawed thicker stock) to ¾" wide by 22" long. Then, crosscut twelve 1½" long splines from the stock. Glue a spline into each slot in the box. After the glue dries, trim the splines (we used a dovetail saw)

Continued

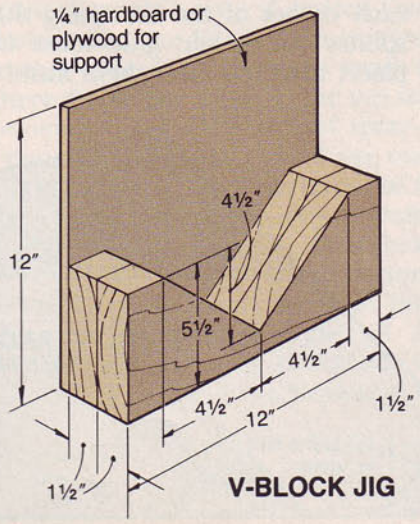

V-BLOCK JIG

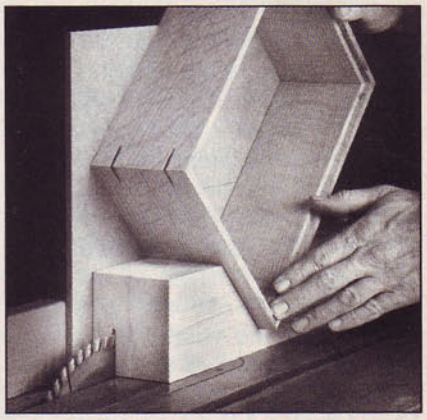

Using the V-block jig shown in the drawing at left for support, cut a pair of spline slots in each corner of the box.

Jewelry case

1/16" from the surfaces of the box and then sand the splines flush. (You'll use the four remaining splines when forming the lid.)

Now, add the box bottom and tray supports

1 From 1/8" hardboard, measure the opening and cut the bottom (C) to size less 1/16" in each direction. Temporarily tape the bottom into the rabbeted opening.

2 Cut the tray supports (D, E) to size. (We resawed thicker stock to 1/4" thick.) Glue the top tray supports (D) to the box front and back, but not the bottom (C). The taped-in-place hardboard will keep the bottom of the tray support flush with the top edge of the 1/4" rabbet. Remove the bottom as soon as you clamp the supports in place. After the glue dries, repeat the process with the lower tray supports (E).

Next, build the lid

1 Cut a piece of 1/2" stock to 2×42". Miter-cut the lid front, back, and ends (F, G) to length.

2 Transfer the curve patterns to the top inside surface of each lid piece. Bandsaw the curves smooth. Sand the bandsawed edge to remove the saw marks.

3 Rout or sand 1/8" round-overs along the top and bottom inside curved edge of each lid piece.

4 Fit your tablesaw with a 1/4" dado blade. Now, position the fence so the dado blade will cut a 1/4" rabbet centered along the curved edge of each lid piece.

5 With double-faced (carpet) tape, adhere a piece of thin hardboard or plywood to your saw top and butted against the fence. Start the saw, and raise the dado blade 3/4" above the surface of the hardboard. The hardboard acts as a zero-clearance insert and keeps the bottom edge of the lid parts from falling into the slot around the blade as they would with a standard blade insert. The insert also allows you to smoothly push the lid pieces over the blade.

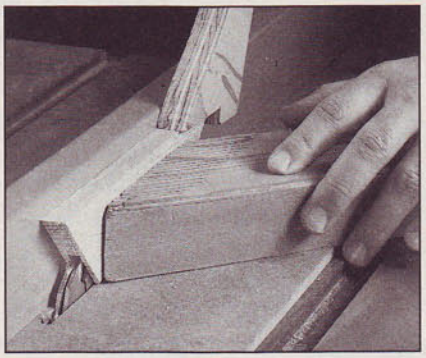

Cut a 1/4" groove 3/4" deep centered along the inside-curved edge of each lid piece. Use a push stick to feed the stock.

6 As shown in the photo *above,* cut a 1/4" groove 3/4" deep centered along the inside (curved) edge of each lid piece (F, G). (We used a feather board to keep the pieces firmly against the fence when cutting the groove.)

7 For the lid panel (H), resaw or plane thicker stock for two 1/4"-thick pieces 3×9". Glue the two pieces edge to edge. Now, trim the panel to 5 15/16×8 7/16" long. The panel should fit slightly loose in the assembled lid, allowing it to expand without splitting the mitered lid joints.

8 Check the fit, and then glue and clamp the lid pieces, allowing the panel to float (no glue) in the grooved opening.

9 Using the spline jig, cut a 1/8" spline slot 1/2" deep centered in each corner of the lid. Using the splines cut earlier, glue them in place; trim and sand them flush.

Hinge the lid, and form the finger pull

1 Mark the location and form a pair of 3/8×1" mortises on the top edge of the box back (A). (We cut the mortise outlines with an X-acto knife and removed the waste with a sharp 1/4" chisel.)

2 With a Forstner bit, drill a 1" hole 1/8" deep on the bottom side of the lid where shown on the Hole Detail accompanying the Exploded-View Drawing.

3 Using a plug cutter or bandsaw, cut a 1"-diameter plug from 1/8" stock. Glue the plug into the recess noting the grain direction shown on the Exploded-View Drawing. Sand the bottom surface flush with the bottom of the lid.

Assemble the two trays

1 Cut the tray pieces (I thru P) to size. Mark the locations and cut 1/8" kerfs in parts L, M, and P where shown on the Tray Drawings. (We raised our tablesaw blade 5/16" above the saw table and used a miter gauge with an auxiliary fence to cut the kerfs.)

2 Cut 1/4" rabbets 1/8" deep along the *ends* of parts J and N. Form 3/16" rabbets 1/8" deep along the *bottom* edge of parts I, J, and N.

3 Cut the tray bottoms (K, O) to size from 1/8" hardboard.

4 Glue each divider assembly (L/M and L/P). Then, glue together each tray, checking for square.

5 Hand-sand the trays and divider assemblies smooth. Glue the dividers in place in each tray.

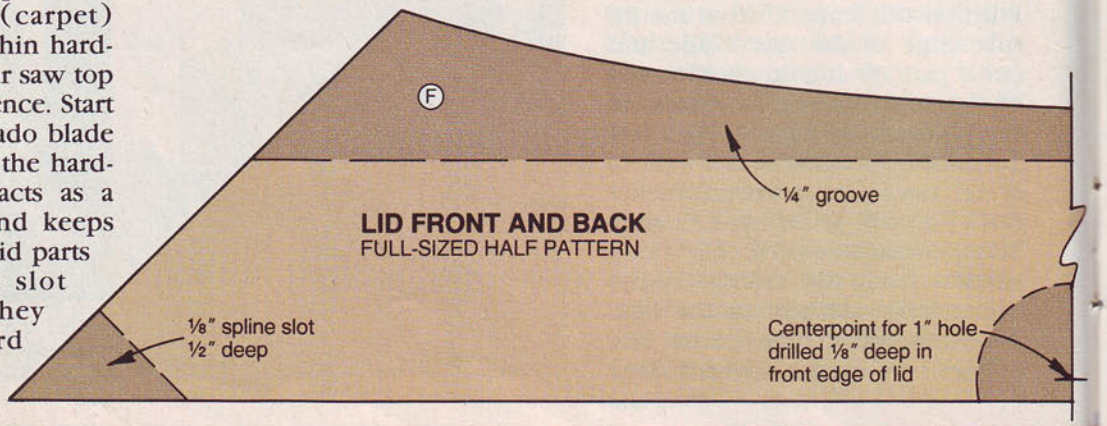

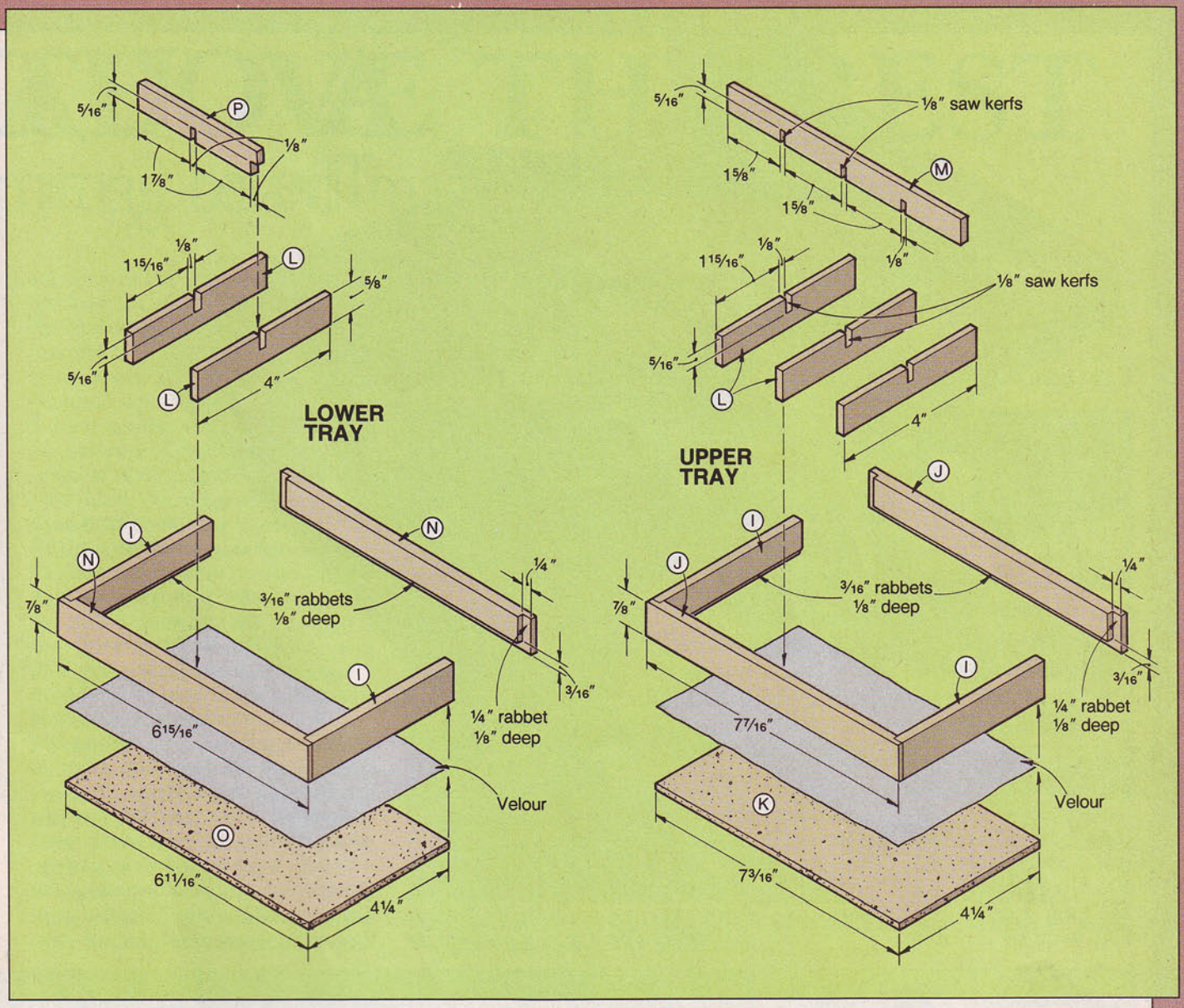

Apply the finish, and fit the fabric

1 Finish-sand the box, lid, and trays (we sanded with 150- and 220-grit sandpaper). Apply a stain if desired (we wiped on Pratt & Lambert light oak S27 stain). Add the finish. (We sprayed on several light coats of finish. We found this easier than trying to apply the finish with a brush.)

2 Adhere the velour fabric to the top surface of the box bottom (C) and tray bottoms (K, O). (We applied spray-on adhesive to the top surface of all three parts. You also could use carpet tape.) With an X-acto knife, trim the fabric ends flush with the bottom surface of the hardboard.

3 Secure the box tray bottoms in place. (We held the bottoms in place by running a fine bead of glue along the ends of the hardboard next to the bottom edges of the rabbets.)

4 Fasten the brass hinges to the box, and then screw the hinges to the lid. Add a 5½" length of necklace chain with two brads to the lid and box where shown on the Exploded-View Drawing.

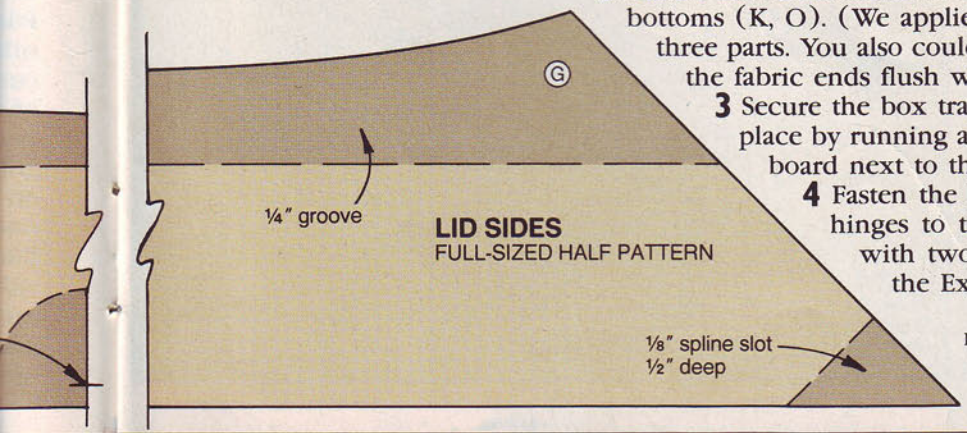

Produced by Marlen Kemmet
Project Design: Daryl Morgan
Photographs: John Hetherington
Illustrations: Kim Downing; Bill Zaun

A CUT
The end-grain

Simple-to-cut grooves and rabbets add a crafty patterned effect to this laminated board. Similar in construction to a butcher's table, our cutting board will be around for years and years of cutting, dicing, and mincing.

1 From ¾"-thick stock, rip and crosscut four strips of oak and one strip of a darker-colored hardwood (we used padauk; walnut also would work) to 1½" wide by 24" long. Cut a fifth oak strip to 1¼" wide by 24" long.

2 Attach an auxiliary fence and a ¼" dado blade to your tablesaw. Follow Step 1 of the drawing *below* to cut ¼" grooves ¼" deep *centered* along one edge of all the strips except *one* of the 1½"-wide oak strips. (We cut the grooves in this step and rabbets in the next in scrap stock to ensure gap-free mating joints.)

3 Put the 1¼"-wide oak strip aside. Now, switch to a ½" dado blade and use Step 2 of the drawing as a reference to cut a pair of ¼" rabbets ¼" deep along the opposite edge of the five 1½"-wide strips.

4 Spread glue on the mating edges of the six strips (we used yellow woodworker's glue). Clamp the strips, alternating the direction of the grain, in the configuration shown on Step 3 and

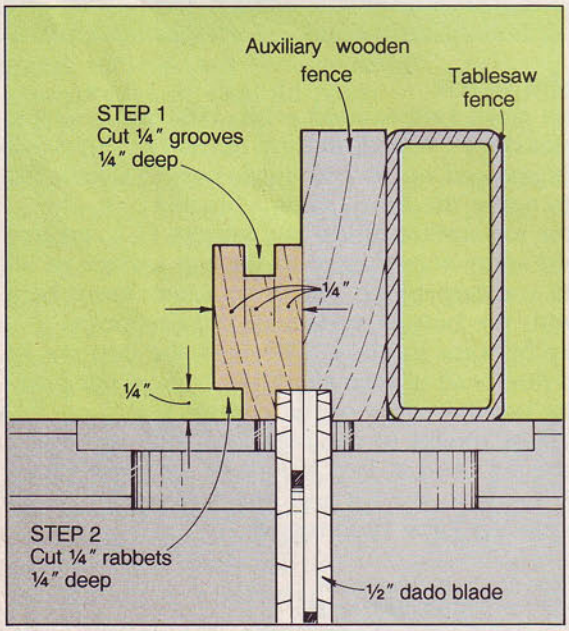

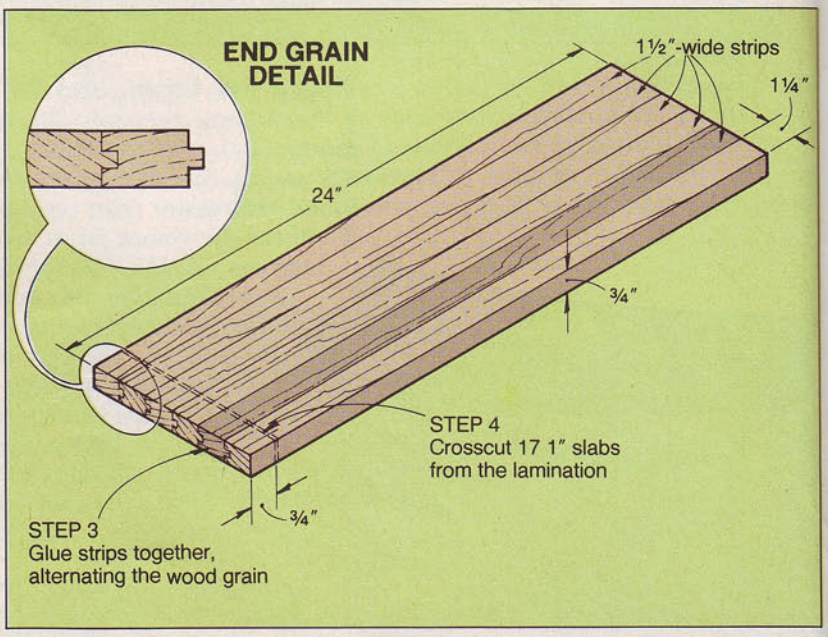

ABOVE THE REST

cutting board makes one striking gift

accompanying End Grain Detail. For ease in gluing and clamping the individual slabs later, check that the lamination is flat; reclamp if necessary. Leave the strips clamped overnight.

5 Remove the clamps and scrape off the excess glue. Carefully belt-sand or scrape both surfaces flat. (We used the edge of a framing square to check for flatness.)

6 Crosscut the lamination into 17 1"-long slabs where shown in Step 4 of the drawing. (As shown in the photo at *right*, we clamped a stop to our tablesaw fence, and then positioned the inside edge of the blade 1" from the outside surface of the stop.)

7 Position the pieces next to each other in the order they were cut. Then, flip every other piece to obtain the V-shaped grain configuration shown on Step 5 of the drawing and the project photo.

8 With the surfaces and ends flush, glue and clamp the slabs with the end grain facing up (we used bar clamps). Again, let the lamination sit overnight before removing the clamps.

9 Sand the cutting board smooth and apply the finish. (We used Behlen's Salad Bowl Finish; a vegetable oil or mineral oil also would work, but we found that several coats of Behlen's completely fills the open-grained oak.)

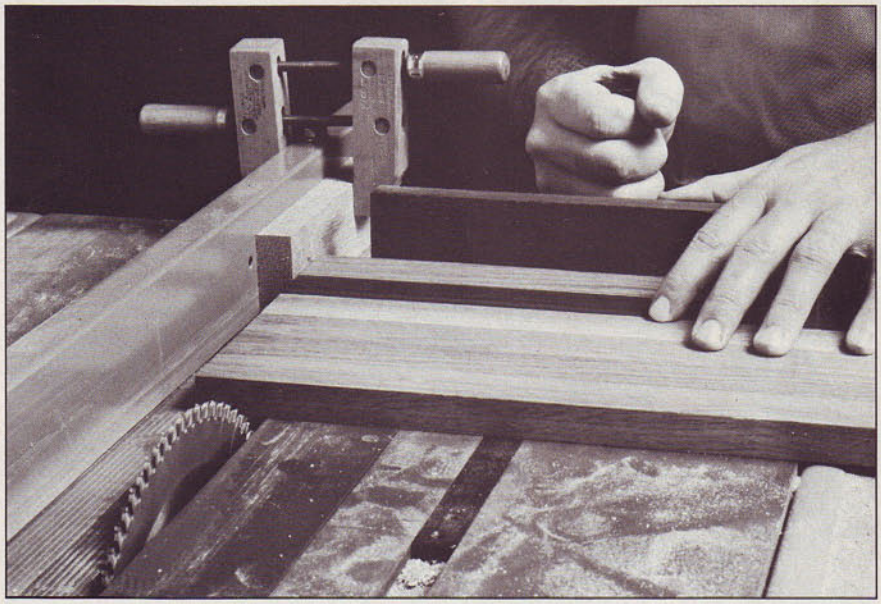

Clamp a scrap block to your rip fence for use as a stop to ensure equal-length pieces. The guard was removed for photo clarity.

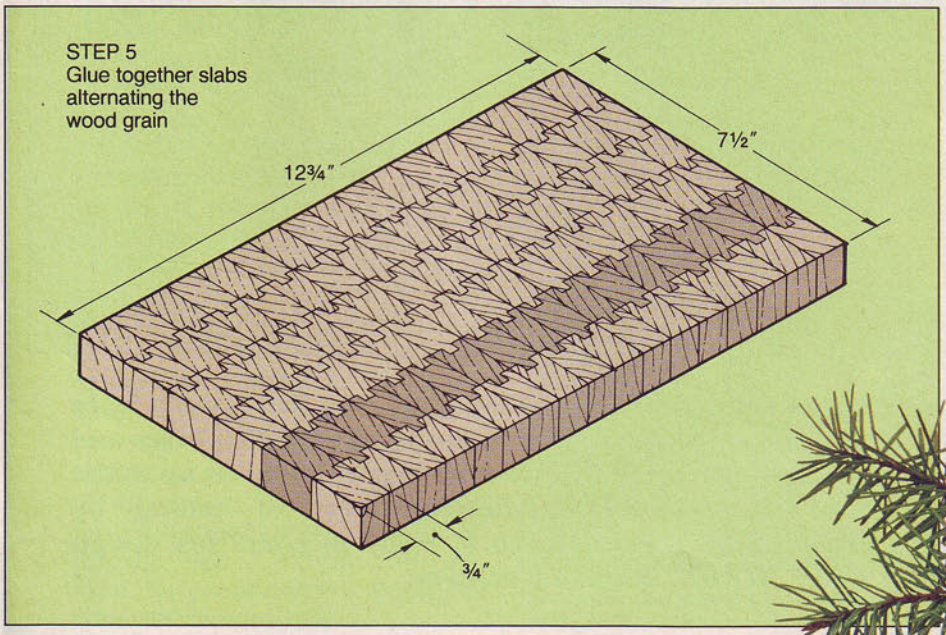

Buying Guide

● **Behlen's Salad Bowl Finish.** Safe for wooden bowls, plates, and eating utensils. One pint, $9 ppd. ($12 U.S. funds for Canadian orders), catalog no. 85006. Armor Products, Box 445, East Northport, NY 11731.

Project Design: James R. Downing
Photographs: Hopkins Associates; Bob Calmer
Illustrations: Jamie Downing; Bill Zaun

Oh what fun it is to ride our Snow-loving

Minnesotans don't hibernate during winter; they march right outdoors and celebrate it. And in the Land of 10,000 Lakes and a lot of snow, we found this classic sleigh that stands up to the abuses of winter—and kids. After eight years of "testing" by his three children, Keith Raivo is ready to share his design with other *WOOD*® magazine readers.

open sleigh

First, laminate the runners

1 From ¾" particleboard or plywood, construct a bending form like the one dimensioned on the Bending Form Drawing.

2 From straight-grained 1 1/16"-thick oak, rip 12 strips (this includes two extra strips in case of breakage) ⅛" thick by 52" long for the runners (A). The pieces are cut long and trimmed to length later.

3 Cover the form with waxed paper to prevent the strips from sticking (see the photo at *right* for reference). Then, cut a 1×1" scrap clamp bar 29" long.

4 Spread glue on the mating surfaces of five runner strips. For joints that will stand up to the extremes of Mother Nature, use either slow-set epoxy or resorcinol glue. Place the 52"-long strips against the form and flush with the straight end of the form. Then, position the clamp bar on the outside edge of the strips. Starting at the end with the cutoff slot, clamp the strips to the form, keeping the edges flush as shown in the photo at *right*. Let the lamination sit overnight.

5 Cut the tail end of the laminated runner to length with a backsaw, using the cut-off slot in the bending form. Remove the clamps and clamp bar. Repeat the process to make a second runner.

6 Scrape the squeeze-out from the edges of each runner and then sand the edges smooth. Cut the runner caps (B) to the size stated in the Bill of Materials. Glue and clamp one of them to each laminated runner, with the edges and tail ends flush. Later, cut or sand a slight curve on the top front edge of the runner cap where shown on the Runner Detail accompanying the Side Assembly Drawing. Rout 3/16" round-overs along the edges of each runner.

Continued

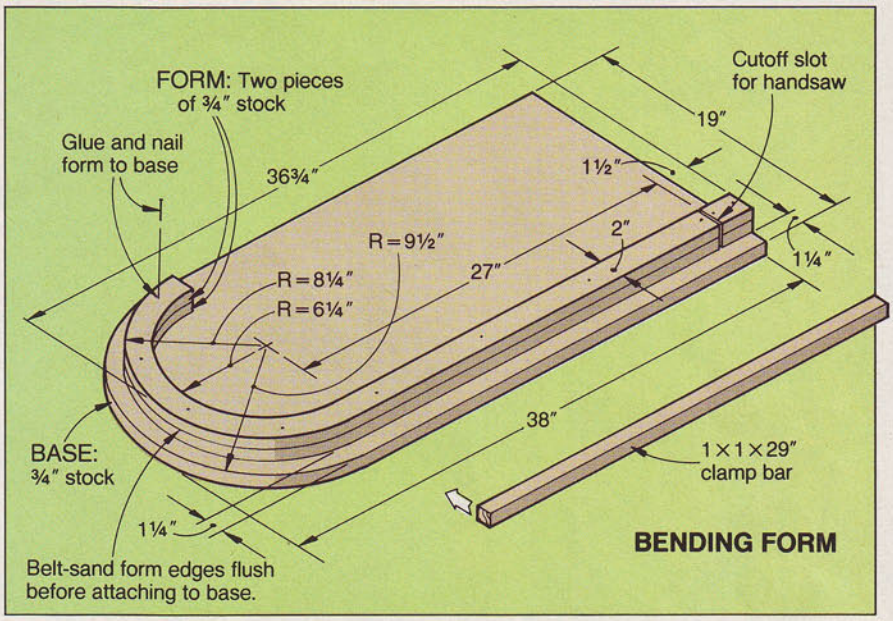

Starting at the straight end, clamp five ⅛"-thick oak strips to the bending form to laminate the runner.

Sleigh

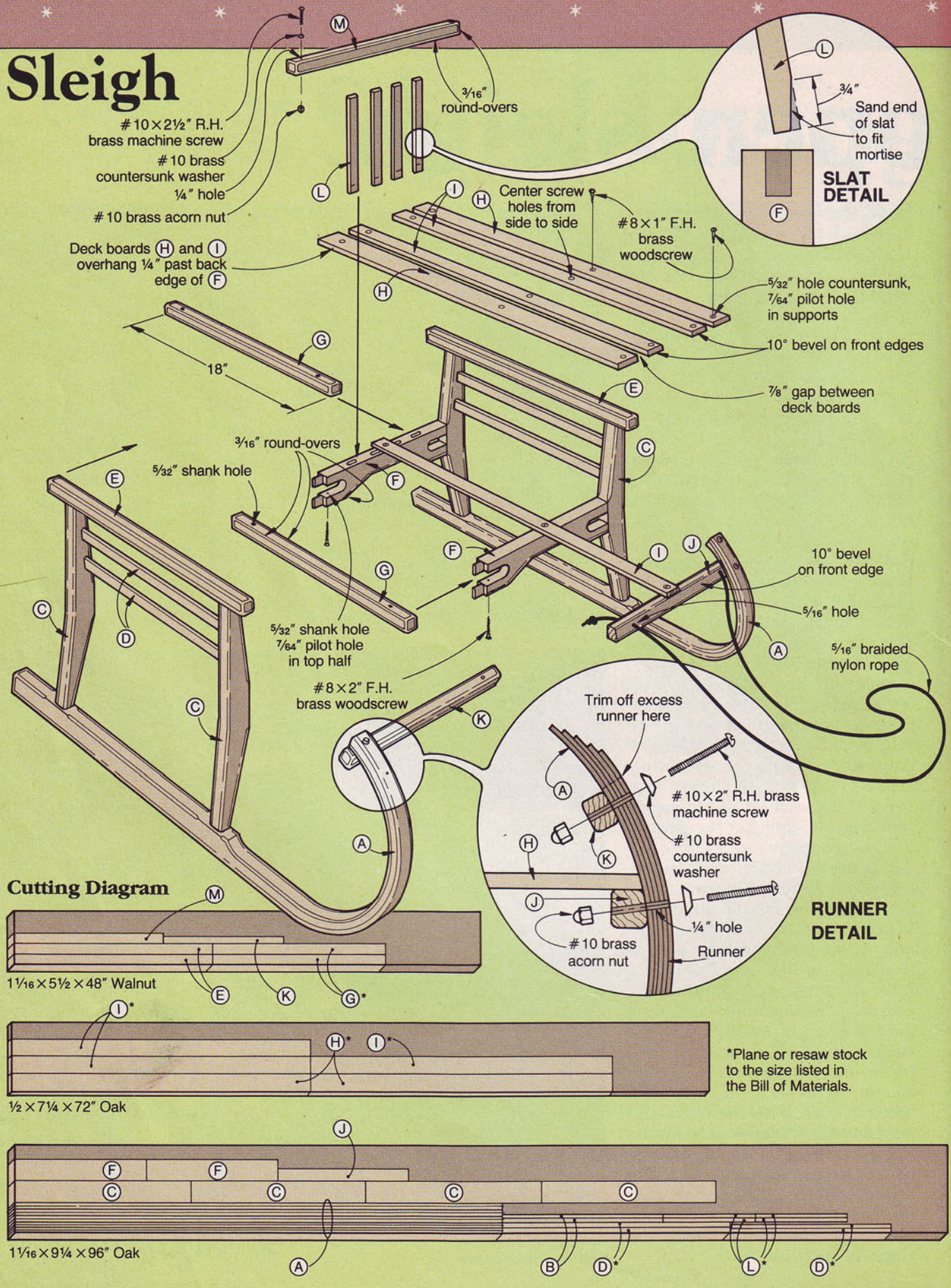
#10×2½" R.H. brass machine screw
#10 brass countersunk washer
¼" hole
#10 brass acorn nut
Deck boards (H) and (I) overhang ¼" past back edge of (F)
3/16" round-overs
Center screw holes from side to side
#8×1" F.H. brass woodscrew
5/32" hole countersunk, 7/64" pilot hole in supports
10° bevel on front edges
7/8" gap between deck boards
18"
3/16" round-overs
5/32" shank hole
5/32" shank hole 7/64" pilot hole in top half
#8×2" F.H. brass woodscrew
10° bevel on front edge
5/16" hole
5/16" braided nylon rope
SLAT DETAIL
Sand end of slat to fit mortise
¾"
Trim off excess runner here
#10×2" R.H. brass machine screw
#10 brass countersunk washer
¼" hole
#10 brass acorn nut
Runner
RUNNER DETAIL

Cutting Diagram

*Plane or resaw stock to the size listed in the Bill of Materials.

Bill of Materials

Parts	Finished Size* T	W	L	Matl.	Qty.
A* runners	5/8"	1 1/16"	48"	LO	2
B runner caps	1/2"	1 1/16"	23 1/2"	O	2
C uprights	1 1/16"	2 1/8"	18"	O	4
D side slats	3/8"	3/4"	16 3/8"	O	4
E rails	1 1/16"	1 1/16"	20"	W	2
F slat supports	1 1/16"	2 1/2"	13 1/2"	O	2
G rails	1"	1"	18"	W	2
H deck boards	3/8"	2"	31 3/4"	O	2
I deck boards	3/8"	1 1/2"	31 3/4"	O	3
J support	1 1/16"	1 1/16"	13 1/2"	O	1
K support	3/4"	1 1/16"	12 1/2"	W	1
L backrest slats	3/8"	3/4"	9 1/4"	O	4
M backrest rail	1 1/16"	1 1/16"	15 1/2"	W	1

*Initially cut parts marked with an * oversized. Then, trim each to finished size according to the how-to instructions.

Material Key: LO-laminated oak, O-oak, W-walnut

Supplies: waxed paper, #8×1" flathead brass wood screws, #8×2" flathead brass wood screws, #10×2" roundhead brass machine screws, #10×2 1/2" roundhead brass machine screws, #10 brass countersunk washers, #10 brass acorn nuts, clear exterior finish, 5/16" braided nylon rope 6' long.

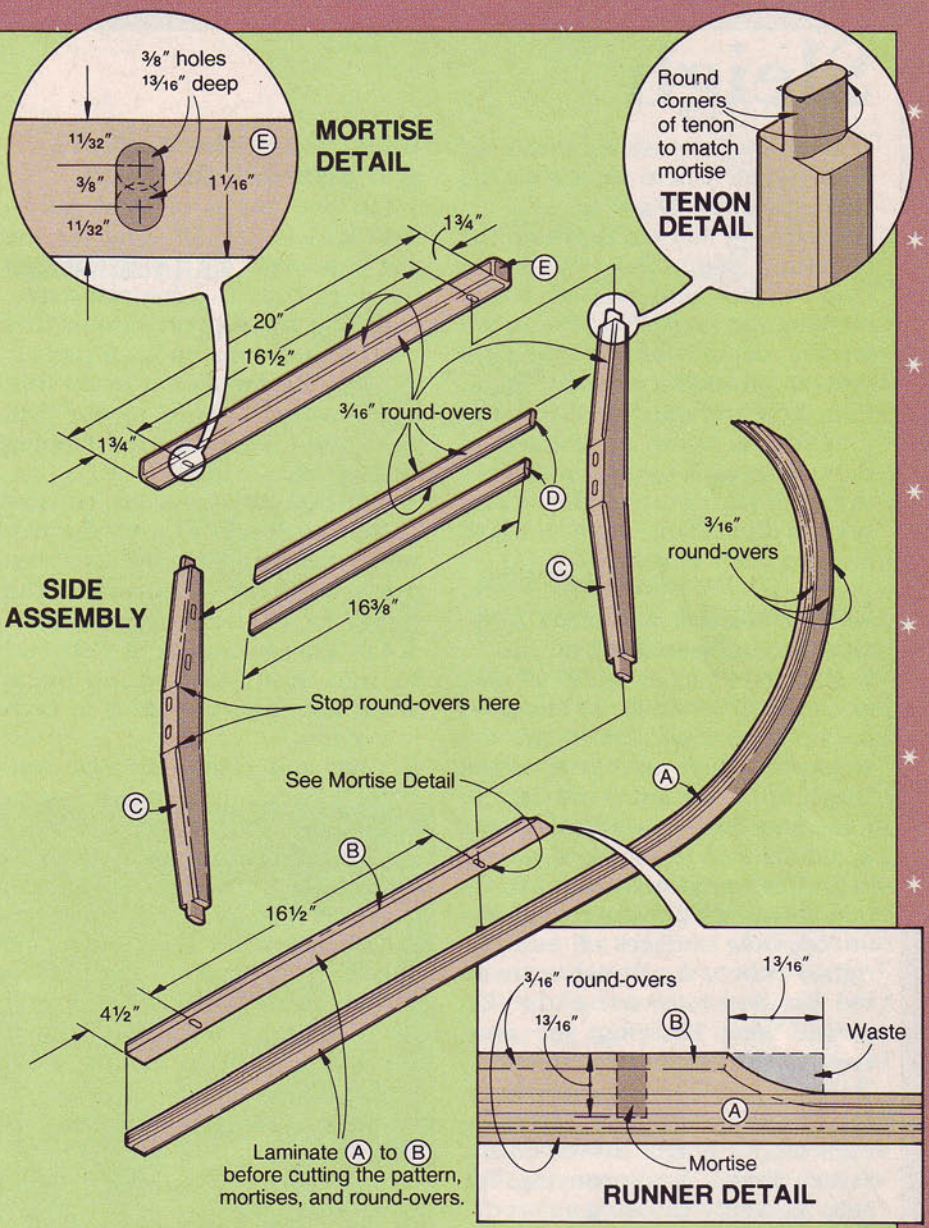

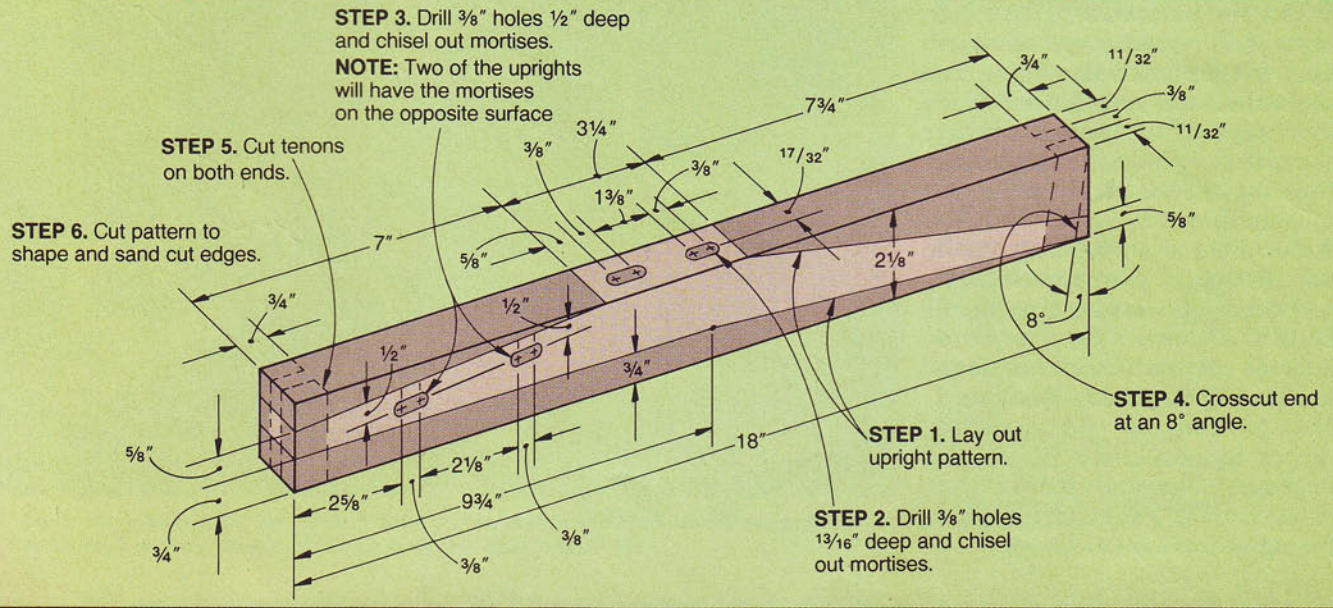

Sleigh

7 Mark the mortise locations on each runner where shown on the Side Assembly Drawing and accompanying Mortise Detail on the previous page. Drill ⅜" holes 13/16" deep where marked. (After marking the mortise locations, we set the depth stop on our drill press to ensure a consistent depth from hole to hole. We also found it helpful to clamp the runners to the drill press-table when drilling the holes.) Remove the waste stock with a sharp chisel to finish forming each mortise.

Construct the side assemblies next

1 Cut four pieces of 1⅛" oak stock to 2⅛" wide by 18" long for the uprights. Now, follow the six-step procedure on the Upright Drawing on the previous page to form the four uprights (C). As noted in Step 3 of the drawing, *make the uprights in pairs*. To do this, mark the ½"-deep mortises on opposite surfaces of two uprights—when the uprights are in the position shown on the Exploded-View Drawing, the mortises need to face each other.

2 With a file and sandpaper, round the square edges of the upright tenons where shown on the Tenon Detail accompanying the Side Assembly Drawing.

3 Cut the side slats (D) to size. Rout 3/16" round-overs along all four edges of each slat. Then, rout the same-sized round-overs along the edges of the uprights where shown on the Side Assembly Drawing. Check the fit of the slats into the mortises in the uprights.

4 Cut the walnut top rails (E) to size. Rout 3/16" round-overs along the edges and ends of each rail. Form the mortises on the bottom edge of each where dimensioned on the Side Assembly Drawing.

5 Dry-clamp the side-assembly pieces to check the fit. Trim if necessary. Glue and clamp together each side assembly, checking for square.

Now, shape the supports, and assemble the sleigh

1 Cut two pieces of 1⅛" oak to 2½" wide by 13½" long for the slat supports (F). Using the Slat Support Drawing for reference, mark the slat-support outline and mortise locations on each piece.

2 Form the mortises. (To do this, we clamped a fence to our drill press and then drilled overlapping holes where marked.)

3 Cut rabbets across the ends of each slat support to form the tenons. Then, bandsaw the two supports to shape. Drum-sand the pieces to remove the saw marks.

4 Cut the lower walnut rails (G) to size. Rout 3/16" round-overs along the edges and ends of each lower rail.

5 Glue and clamp the slat supports between the two side assemblies, checking for square. Slide the lower rails into the notches in the slat supports and clamp them in place. The front edge of each rail should sit ¼" in front of the front face of the front support. To secure the walnut rails (you'll want to work from the bottom side), drill the holes and drive the screws in place (see the Exploded-View Drawing for reference).

It's time to add the deck boards

1 Cut the deck boards (H, I) to size, beveling the front ends at 10°. Cut the front deck-board support (J) to size, bevel-ripping the front edge at 10° where shown on the Exploded-View Drawing.

2 Rout or sand a ⅛" round-over along the edges (but not the ends) of each deck board. Switch bits, and rout 3/16" round-overs on the deck-board support (J).

3 Locate and mark the center of each deck-board support. Then, drill the holes and fasten the deck boards to the deck-board supports, starting with the center deck board and working outward. See the Exploded-View Drawing for reference. From outside edge to outside edge, the total width of the deck should equal 12".

4 Position the assembly on the sleigh. Then, mark the location and fasten the deck boards to the supports (F).

SLAT SUPPORT

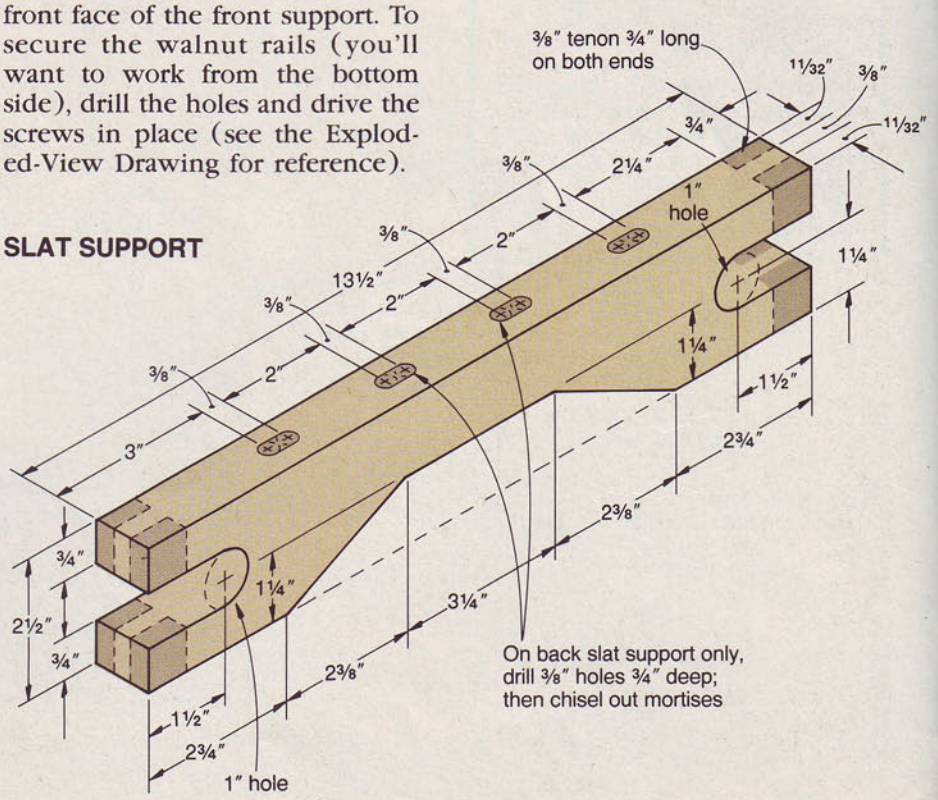

5 Clamp a 2×4 to an outside deck board where shown in the photo *below*. (The 2×4 keeps the deck board straight.) Using the Runner Detail accompanying the Exploded-View Drawing for reference, drill the holes and screw the runner to the deck-board support (J). (To prevent the acorn nuts from working loose over time, we put a drop of epoxy in each nut before mating it with the machine screw.) Move the 2×4 to the other outside deck board and repeat the process.

6 Cut the top support (K) to size. Drill the holes and fasten it to the runners where shown on the Runner Detail.

7 With a fine-toothed saw, trim the top of each runner flush with the top of the runner support.

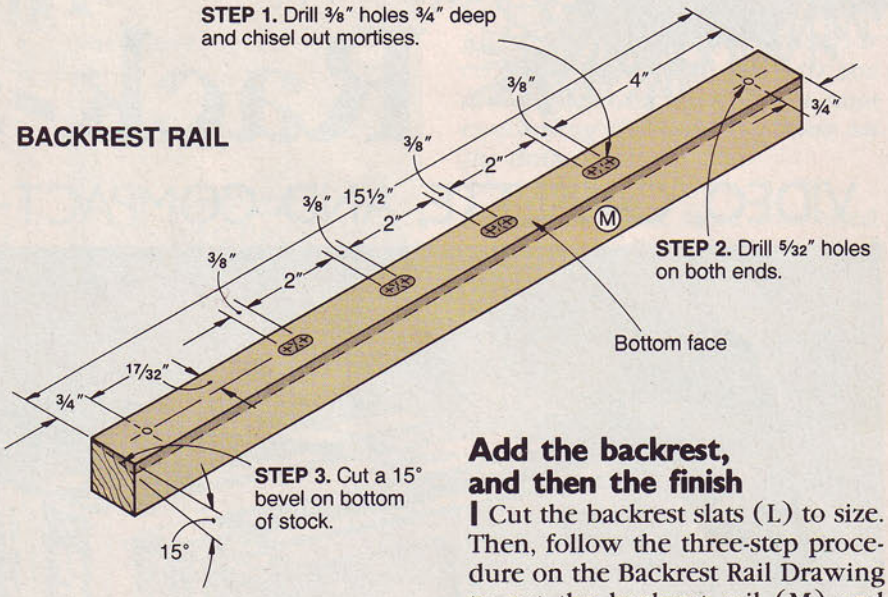

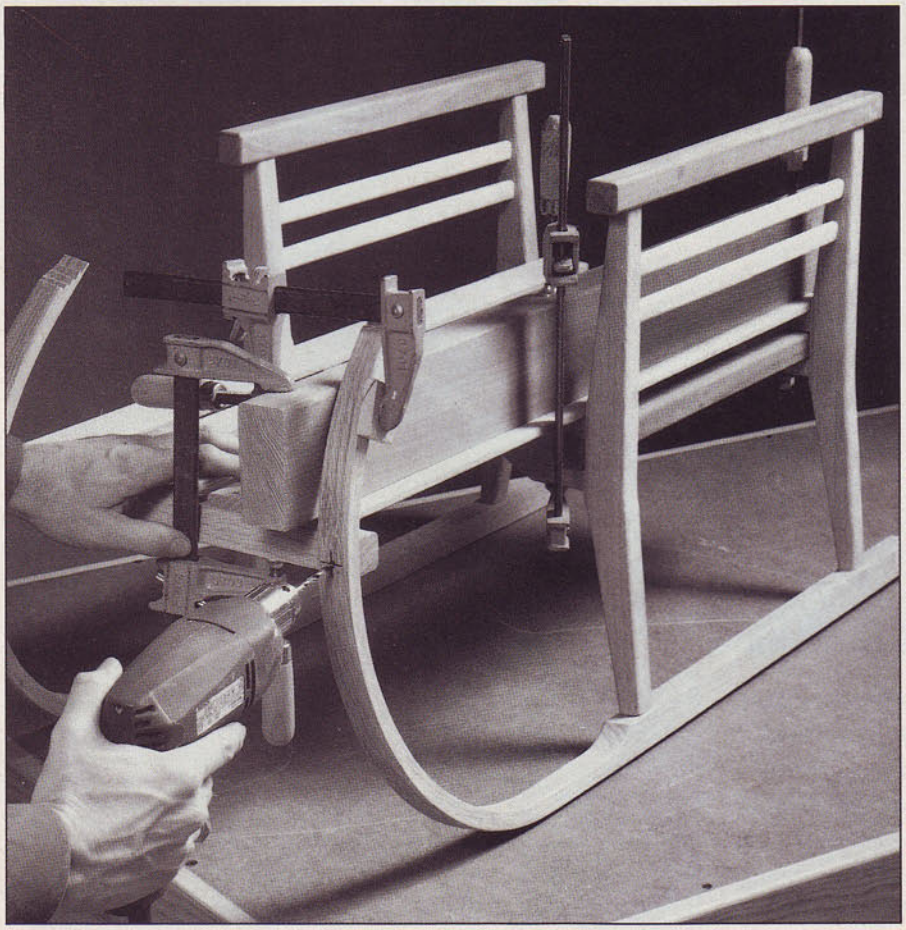

Mark the centerpoint and drill a hole for fastening the deck-board support to the laminated runner. The 2×4 helps keep the deck boards flat.

Add the backrest, and then the finish

1 Cut the backrest slats (L) to size. Then, follow the three-step procedure on the Backrest Rail Drawing to cut the backrest rail (M) and locate and form its mortises.

2 Sand the bottom front end of the slats to fit into the mortises in the rear support (F). See the Slat Detail accompanying the Exploded-View Drawing for reference.

3 Glue the backrest slats into the mortises in the rear support (F). Now, fit the backrest rail (M) onto the top of the slats. Drill the holes and fasten the backrest rail to the top ends of the top rails.

4 Drill a pair of 5/16" holes in the deck-board support (J) where shown on the Exploded-View Drawing to accept the pull rope.

5 Sand the sleigh. Apply the finish (we used three coats of clear exterior polyurethane, steel-wooling between coats). Add the braided nylon rope. Apply paraffin or ski wax to the bottom of the runners for added ease in sliding.

Buying Guide

• **Slow-set epoxy.** One 8-oz. bottle of resin and one 8-oz. bottle of hardener, catalog no. WM30, $18 ppd. System Three Resins, P.O. Box 70436, Seattle, WA 98107.

Produced by Marlen Kemmet
Project Design: Keith Raivo Designs, Brook Park, Minnesota
Photographs: John Hetherington; Hopkins Associates
Illustrations: Kim Downing; Mike Henry

The Three Rack-a-tiers

VIDEO, CASSETTE, AND COMPACT-DISC ORGANIZERS

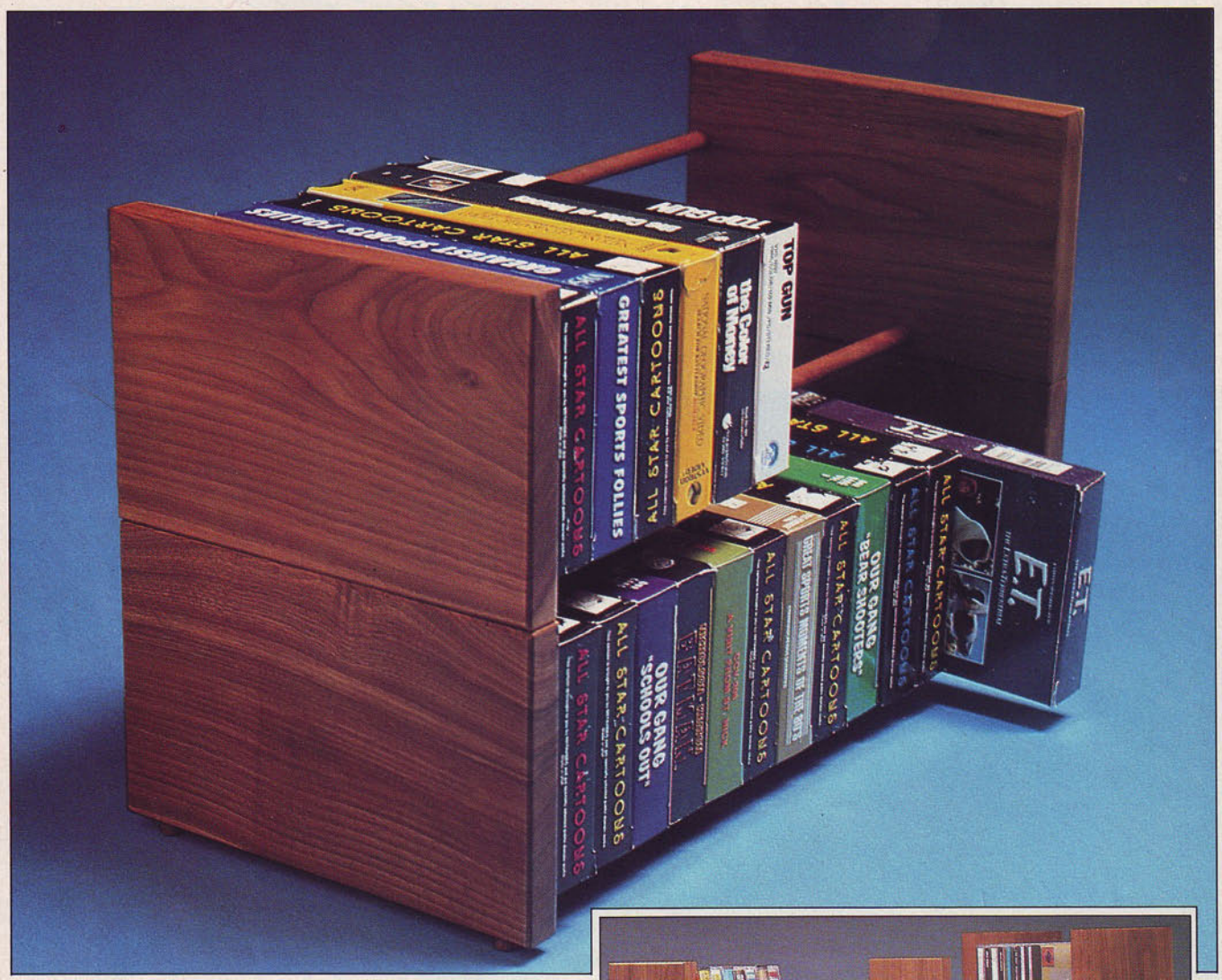

It's time for those tapes and discs to come out from behind the couch and under the coffee table. Here's a trio of simple solutions to keep your collection organized and tastefully displayed. Stack one rack on top of the other to increase your storage space as your collection grows. Or, if you're just starting out, build a single organizer now and construct more as you need them.

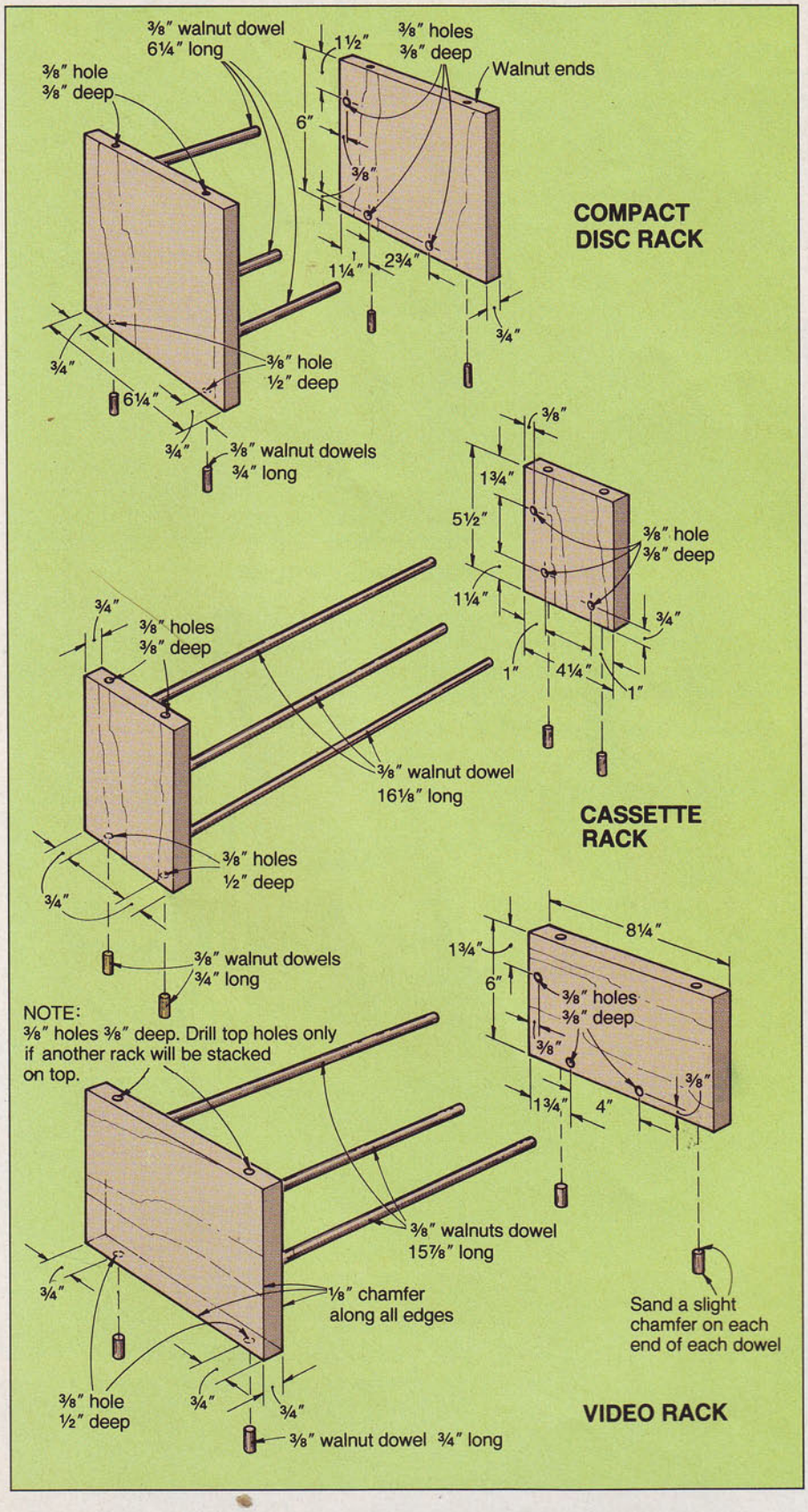

***Note:** The following instructions are for the video rack shown below left. To build the cassette or compact-disc rack, refer to the drawings for each and to the note concerning the hole locations on the drawings.*

1 From ¾"-thick stock (we used walnut), cut the rack ends to 6" wide by 8¼" long. When cutting the ends to size, note the grain direction shown in the photo on the opposite page.

2 Mark the hole centerpoints on the inside face of each endpiece. (We put the surface with the nicest grain pattern on the outside.) An easy way to ensure your holes align is to mark and drill the holes in one endpiece, and then use dowel centers to transfer the hole locations to the other endpiece.

3 If you plan to stack the units as shown on the opposite page, mark the hole locations on the top and bottom edges where dimensioned on the drawing. Don't drill holes in the top edge of the uppermost unit. Rout or sand a ⅛" chamfer along all edges.

4 Drill ⅜" holes ⅜" deep at each marked centerpoint on the inside faces and ½" deep in the bottom and top edges where marked.

5 Using a stop for consistent lengths, cut three pieces of ⅜" walnut dowel to length for each rack. Sand a chamfer on each end of each dowel. Glue the dowels between the endpieces. (To avoid wobble in the finished rack, we clamped the endpieces to a flat surface so the bottom edges were level with each other.)

6 Cut ¾"-long pieces of ⅜" dowel for the connecting dowels and feet. (To make your own dowels, see page 30.) Sand a chamfer on both ends of each dowel. Glue the dowels into the bottom edge (they slide into the holes in the top edge of the mating endpiece). Apply a clear finish.

Project Design: James R. Downing
Photographs: Hopkins Associates
Illustrations: Kim Downing; Bill Zaun

SANDING

STRATEGIES FOR TAKING THE DRUDGERY OUT OF PREPARING WOOD FOR FINISHING

Ask any group of woodworkers what they like least about their craft, and we bet that most of them will vote for sanding. In fact, inventors and manufacturers from far and wide have devised one gadget after another to extract the pain out of this drudgery. For truly professional results, you need to get through the maze of abrasives and tools, know which ones to use for each job, and learn the tricks for putting these products to good use. And, that's where this short course comes in.

CHOOSING THE BEST ABRASIVE FOR THE JOB

If picking and choosing among today's abrasives rubs you the wrong way, just keep these buying points in mind:

• **You can select from three types of abrasives:** garnet, aluminum oxide, and silicon carbide. See the chart *opposite top* for the advantages of each.

Garnet papers have naturally occurring minerals bonded to their surface. Because these grains have to be sifted, they're not consistent in size, so they abrade a surface less uniformly than man-made abrasives such as the following two varieties.

Besides having consistently sized particles, ***aluminum-oxide*** and ***silicon-carbide*** abrasives (both man-made) last longer because of their greater hardness. You can purchase the finer grades of these papers with a zinc-stearate coating which acts as a dry lubricant to reduce load-up of the surface with wood particles. Although this coating gives the abrasive a white coloring, don't assume that all white-colored abrasives have a zinc-stearate coating. For example, 3M colors its Stikit line of self-adhesive papers white for brand-identification purposes. To spot a zinc-stearate-coated product, look for words such as "no-load," "no-fill," or "nonclogging." Although this coating adds a few cents to the cost of abrasives, we've found that it's money well spent.

PROVEN TECHNIQUES FROM THE SHOP TESTED WOOD MAGAZINE SHOP

ABRASIVE LANGUAGE: DEFINING THE CHOICES

ABRASIVE	SUGGESTED GRITS	ADVANTAGES	COMMENTS
Garnet	60, 80, 100, 150	• Has less tendency to burn end grain because garnet particles break down easily. • Low cost	• Garnet paper has a relatively short lifespan. • Available in paper-backed sheets only. • Grains of inconsistent size and color.
Aluminum Oxide	60, 80, 100, and 150 in belts. 60, 80, 100, 150, 220, and 320 in sheets	• Cuts faster, lasts longer, and has a more uniform surface than garnet abrasives.	• About the same price as garnet papers. • Grains of consistent size and color.
Aluminum Oxide with Zinc-Stearate Coating			• Zinc-stearate coating reduces load-up in fine grits.
Silicon Carbide	220–1500 in sheets	• Cuts faster and lasts longer than aluminum oxide. • Zinc-stearate coating reduces load-up. • Cuts faster, with less load-up, in glue-impregnated substances such as particleboard.	• Because of its higher cost, we prefer silicon-carbide abrasives for wet-sanding only. • Use with water for wet-sanding finish coats. • Grains of consistent size and color.

GETTING THE RIGHT GRIT

Grit	Heavy wood removal	Surface shaping	Surface flattening	Smoothing	Preparation for finish	Between finish coats
40	■					
60	■	■				
80		■	■			
100–120				■		
150–220					■	
320–600						■

• Go with a grit to match the job. An abrasive that's too coarse will lead to excessive scratch marks in your project's surface, and you will have to work hard to remove them. On the other hand, a sandpaper that's too fine for the job will clog with wood particles. So, check the chart *above* for the correct succession of grits for your projects. In the *WOOD*® magazine shop, we typically true a surface with a 60-grit aluminum-oxide abrasive when necessary, then smooth the project with 120-grit garnet sandpaper. To prepare softwood surfaces for a finish, we sand with 150-grit garnet paper. Because hardwoods can take a more polished surface prior to finishing, we sand these woods with a succession of 150-grit paper and a 220-grit zinc-stearate-coated aluminum-oxide abrasive.

• Know when to use an open-coat paper. Most sandpapers have a closed coat, meaning that 100 percent of their surface is covered with abrasive grains. However, in some coarse grits you will find open-coat papers with only 70 percent grain coverage on their surfaces. This extra space between grains helps prevent clogging of the abrasive surface with wood fibers, especially when you work with softwoods.

GETTING THE MOST FROM SANDING TOOLS

Even the proper abrasives aren't of much help until you combine them with the correct tool. To help you along, we prepared the chart on the next two pages. In the *WOOD* magazine shop, we make great use of the stationary belt/disc sander, portable belt sander, and our own hands for many sanding tasks. The following tips will help you better utilize these tools in your shop.

Continued

SANDING SHORTCUTS

STATIONARY BELT/DISC SANDER TIPS

● **For perfectly flush half-lap joints,** cut the half laps 1/16" longer than the finished size, then sand them flush with a disc or vertical-belt sander as shown *below.*

Note: *For this procedure, and the next two tips, the belt- or disc-sander table must be set at 90° to the abrasive surface.*

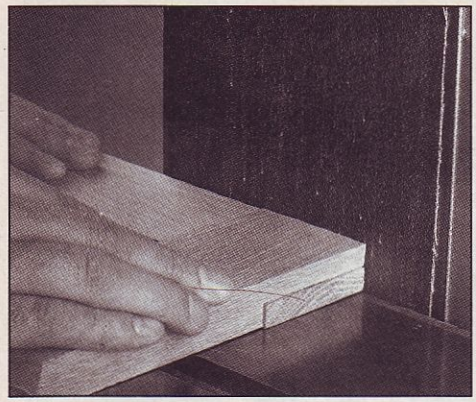

Slightly long half-laps joints come perfectly flush with the aid of a disc or vertical-belt sander.

● **Fine-tune miter joints** on a vertical-belt or disc sander as shown *below.* Since few woodworkers can cut perfect miters every time, this method allows you to custom-match miters with complete control over stock removal. Because the disc moves faster near its rim than near its center, sand close to the center of the disc for slower, more controlled stock removal.

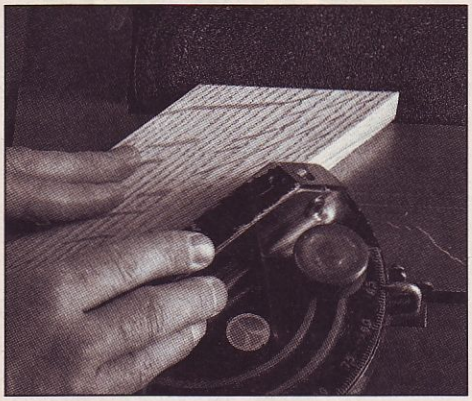

For slightly miscut miters, you can sand one of the pieces to fit the other exactly.

A BAKER'S DOZEN SANDING MACHINES: ONE FOR EVERY JOB

SANDER	PURPOSE	APPLICATIONS	SUGGESTED ABRASIVES
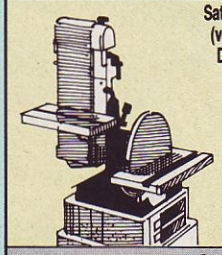 Sationary Belt (vertical) and Disc Sander	Rapid removal of stock on edges.	Sanding back to a line. Touching up miters and compound angles. Chamfering or rounding dowel ends.	36- to 120-grit cloth-backed aluminum oxide.
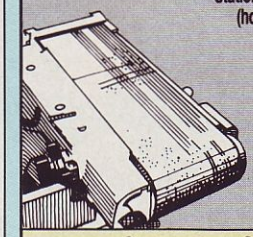 Stationary Belt (horizontal)	Rapid removal of stock on surfaces.	Flattening small areas of face grain. General smoothing and truing. Shaping. Use end of belt as free-hand drum sander.	36- to 120-grit cloth-backed aluminum oxide.
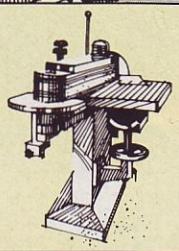 Stationary Edge Belt Sander	Rapid removal of stock on edges.	Smoothing edge grain. Sanding back to a line. Concave sanding on the open roller.	36- to 120-grit cloth-backed aluminum oxide
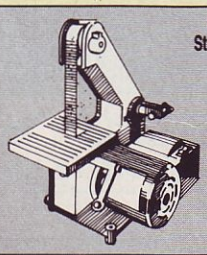 Stationary Strip Sander	Sanding small parts.	Metal sharpening. Inside edges and tight areas.	36- to 120-grit cloth-backed aluminum oxide.
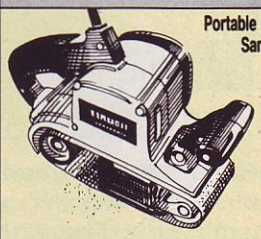 Portable Belt Sander	Rapid removal of stock on large, flat surfaces.	Truing stock glued up for width. Lowering joints and edges to a uniform height. Mounted in accessory stands, these machines work as small stationary belt sanders.	60- to 120-grit cloth-backed aluminum oxide.
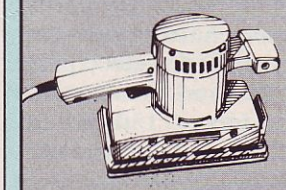 Finishing Sanders	Smoothing surfaces and protective finishes.	Final sanding. ¼-sheet (palm) sanders useful on small areas. ⅓- and ½-sheet models best for larger areas.	120- to 320-grit paper-backed aluminum oxide, garnet, or silicon carbide.

SANDER	PURPOSE	APPLICATIONS	SUGGESTED ABRASIVES
Random-Orbit Sanders (electric and pneumatic) 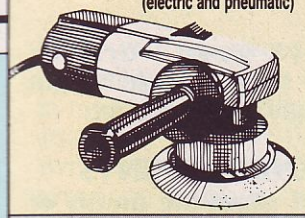	High-speed finish-sanding without swirl marks.	Flattening joints while leaving a smooth surface. Special pad available for contours.	80- to 320-grit paper and adhesive-backed aluminum oxide and silicon carbide.
Straightline Sanders (electric and pneumatic) 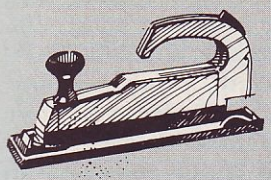	Sands with the grain.	Flattening high-low areas. Lowering joints and edges to a uniform height.	80- to 320-grit cloth-backed aluminum oxide and silicon carbide.
Flexible Disc Sander 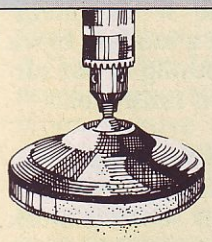	Rapid stock removal on irregular surfaces.	Shaping, smoothing, and polishing small stock. Power-sanding bowls when chucked in a portable drill with lathe running. Various sizes available from 1–6".	36-to 400-grit cloth-, paper-, and adhesive-backed aluminum oxide and silicon carbide.
Flap Wheels 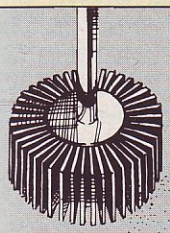	Conform to irregular surfaces.	Corrosion removal on tools and hardware. Sanding carvings and spindles.	60-to 180-grit cloth-backed aluminum oxide
Drum Sander	Sanding concave and convex edges to smooth, flowing shapes.	Sanding back to a line on curved, bandsawed edges.	60- to 150-grit cardboard-backed aluminum oxide.
Pneumatic (inflatable) Drum Sander	Smoothing and shaping of irregular surfaces	Smoothing carvings and intarsia parts. Fill drum bladder to varying pressures to change conformity of drum.	80- to 180-grit cloth-backed aluminum oxide
Hand Sander 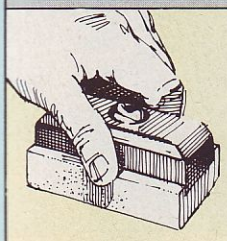	Controllable truing and smoothing.	See page 67 for specialized sanding blocks to help you sand tight and irregular surfaces. Foam sanding blocks work well on rounded surfaces.	80- to 1,500-grit paper-, cloth- and adhesive-backed garnet, aluminum oxide, or silicon carbide.

● **Perfectly shaped corners** result from marking a radius and then carefully sanding back to that line with a belt or disc as shown *below*. For maximum control, follow the illustrations *below*.

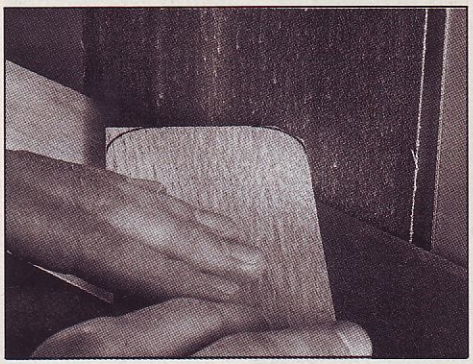

Use a disc or vertical-belt sander to shape flowing convex curves.

SANDING SMOOTH CORNERS

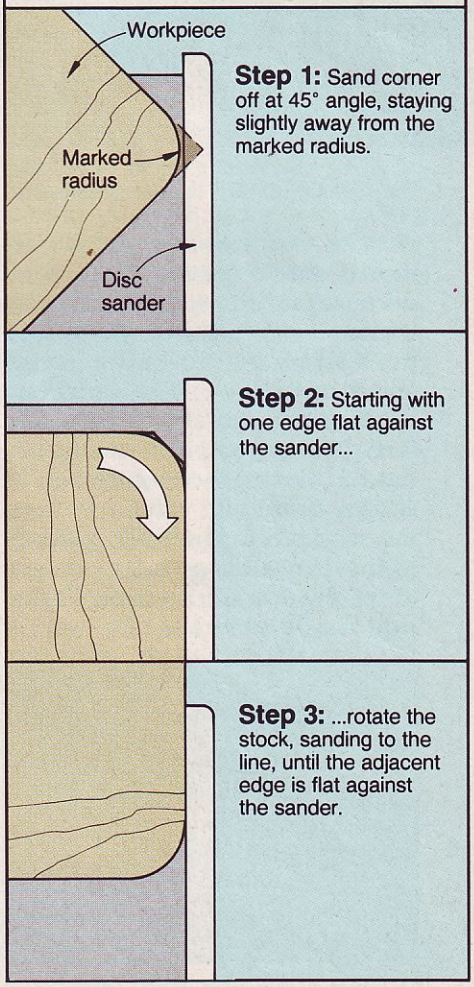
Workpiece
Marked radius
Disc sander
Step 1: Sand corner off at 45° angle, staying slightly away from the marked radius.
Step 2: Starting with one edge flat against the sander...
Step 3: ...rotate the stock, sanding to the line, until the adjacent edge is flat against the sander.

Continued

SANDING SHORTCUTS

• **Make great-looking dowel chamfers** with the jig *below* clamped to your sander's table. With your sander running, place the dowel on the machine's table and hold it as shown *below*. Give the dowel at least one full rotation to sand a complete chamfer.

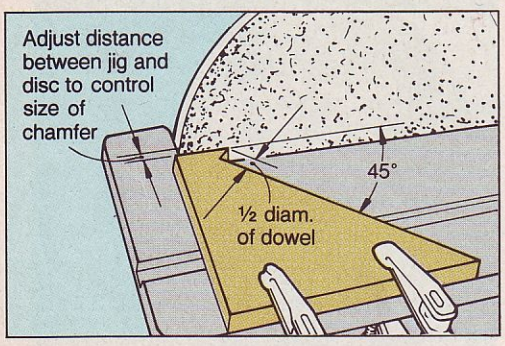

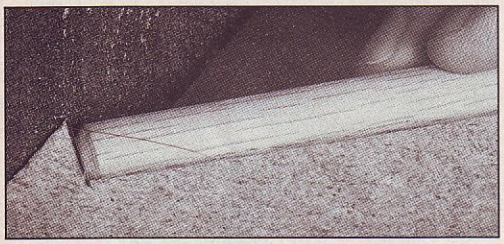

With the chamfering jig in place, spin the dowel until the chamfer is complete.

• **You can smooth small resawed stock,** even if you don't own a thickness planer. With double-faced tape, attach a 1½"-thick block that's nearly as wide and long as the resawed piece to the face opposite the resawed surface. Then, lower the workpiece onto a moving horizontal belt as shown *below*. Be careful to keep the workpiece parallel to the belt as the two surfaces make contact. Move the workpiece from side to side as you sand.

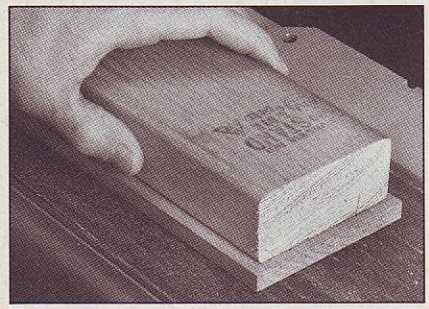

To smooth resawed stock, position it parallel to the sanding belt.

PORTABLE BELT SANDER POINTERS

• **For rapid stock removal with a portable belt sander,** hold the sander at approximately a 30° angle to the grain of the workpiece, and keep it cocked this way as you move the machine up and down the workpiece. This cross-grain sanding works fast, but leaves a rough surface.

• **To smooth surfaces,** work the belt sander as shown *below*. Hold the sander parallel with the grain, and keep the belt sander moving at all times. Work the sander in long paths that cover the full length of the workpiece. Minimize cross-grain movements.

• **For an evenly sanded surface,** don't bear down on the machine; let the weight of the sander do the work. And, be aware of how much of the belt is in contact with the workpiece. Otherwise, you may accidentally miss the ends of the surface, or round over the edges by tipping the sander.

• **Drape the power cord over your shoulder** to keep it out of the way of the belt sander.

• **To check your work** for gouges and hollows, hold a light at a low angle to the surface.

HAND-SANDING HINTS

• **Don't sell short the merits of hand sanding.** Power sanders save you plenty of time—no doubt about it—but a good, old-fashioned sanding block flattens a surface better than any machine. Also, a hand block gives you more control over those delicate situations such as gently rounding an edge. Around the *WOOD* magazine shop, we use a sanding block for the final smoothing of flat surfaces and between finish coats.

• **To save hand-sanding time,** you may want to invest a few dollars in a 3M Stikit sanding block such as the red one shown on page 62. We found these plastic blocks comfortable, and abrasive changes take just a few seconds. To replace the sandpaper, you simply tear off the old abrasive and pull some fresh material from the built-in roll.

• **Custom-made sanding blocks** will save you loads of time when sanding tricky areas. As shown

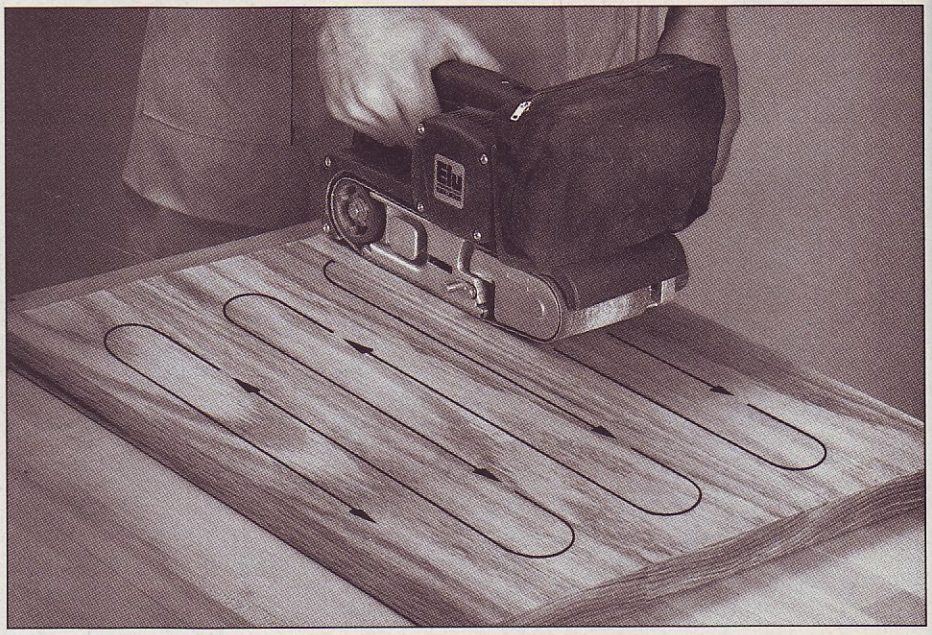

Try to minimize cross-grain movements when smoothing a surface with a belt sander. Sand the full length of the workpiece and keep the machine moving.

below you can shape a variety of custom-made blocks to conform to most any smoothing task. Then, attach an adhesive-backed abrasive. Or, affix nonadhesive abrasives with glue or adhesive spray—just remember that the paper will be difficult to remove.

A FEW MISTAKES TO AVOID AT ALL COSTS

Sometimes, what you *don't* do while sanding counts as much as what you *do* do. For help, keep these pointers in mind.

• **Don't let load-up bog you down.** Steve Martyr, a technical representative of 3M, estimates that most people toss away their sandpapers long before the abrasive particles wear out. The reason: premature load-up of the abrasive with sanding dust. If you experience load-up early in the life of your abrasives, Steve suggests you switch to either a coarser grit or an open-coat abrasive, or try a zinc-stearate-coated product.

Also, remember to collect sanding dust from the work surface to avoid load-up. Occasionally stop and vacuum both the work surface and the bottom of the sander.

• **Sanders can be as dangerous as any other cutting machine in your shop,** so keep all guards in place. If you've ever accidentally touched a moving sanding belt, you know how fast abrasives can remove skin. Guards also protect you if a belt tears.

• **Sanding dust contributes to lung disease,** so opt for machines with dust collection capabilities when you go shopping. In recent years, power-tool manufacturers have concentrated more and more on dust-collection in designing their tools. For instance, today you can buy finish sanders that draw dust through holes in the sandpaper and portable belt sanders with vacuum attachments.

If your sanders don't have dust-collection ports and accessories, rig up your own clean-air aids. As shown at *right,* you can attach a furnace filter to the air-drawing side of a window fan, then point the fan away from you as you work. This simple dust collector will move much of the airborne dust away from you, and capture some in the process. But, remember that even with dust-collection systems in place, it still pays to wear an approved respirator.

We strapped a furnace filter to a window fan with bungee cord for an inexpensive dust evacuator.

• **Don't accidentally mar your flat workpieces** by setting them on a bare workbench when sanding them with an orbital finish sander. Instead, place some kind of cushion, whether it's a piece of carpet pad, cardboard, or even a blanket, under the workpiece before finish-sanding it, as we did in the photo *above.* Otherwise, any debris on the surface of your workbench will transmit swirly marks and dents to the back side of your project.

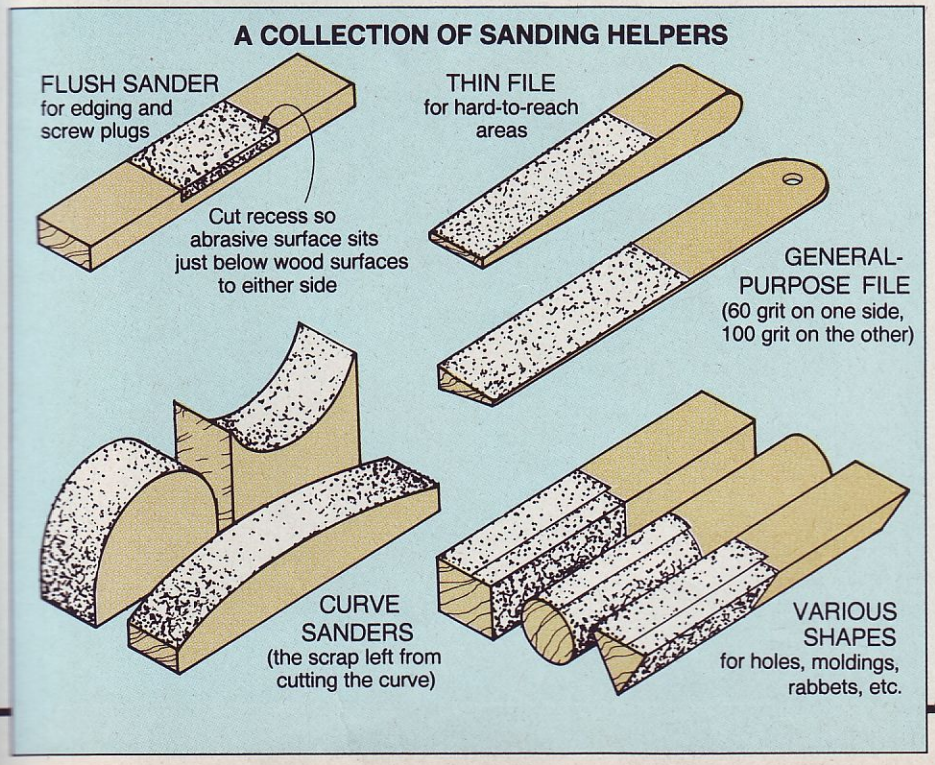
A COLLECTION OF SANDING HELPERS
FLUSH SANDER
for edging and screw plugs
Cut recess so abrasive surface sits just below wood surfaces to either side
THIN FILE
for hard-to-reach areas
GENERAL-PURPOSE FILE
(60 grit on one side, 100 grit on the other)
CURVE SANDERS
(the scrap left from cutting the curve)
VARIOUS SHAPES
for holes, moldings, rabbets, etc.

Buying Guide

For free catalogs of abrasive supplies, contact these companies:

Econ-abrasives, P.O. Box B865021, Plano, TX 75086. Call 800-367-4101.

Industrial Abrasives, 642 N. 8th St., P.O. Box 14955, Reading, PA 19612. Call 800-428-2222.

The Sanding Catalogue, P.O. Box 5069, Hickory, NC 28603-5069. Call 800-228-0000.

Written by Bill Krier
with Jim Downing
Photographs: John Hetherington
Illustrations: Jim Downing; Jim Stevenson; Mike Henry

OZARK CRAFTSMAN JIM WATSON HAS A PHILOSOPHY ABOUT OLD FURNITURE

"GOOD WOOD IS WORTH RESTORIN' "

Like most young couples just starting out, Jim and Sue Jo Watson made do with what they could afford. "Back in the early 70s, you could pick up a lot of nice furniture here cheap," says Jim. "It just happened to be in real bad shape."

That didn't hinder this talented and resourceful Arkansas native, though. Working wood had always held his interest. So, while he spent his days managing an auto supply store, he occupied his evenings renewing furniture.

The fruits of his labor were a houseful of valuable pieces . . . and a growing reputation as a furniture restorer. "I got so busy doing other people's furniture, I decided to go at it full-time," Jim says. "I've never been sorry."

His business started small. On a four-acre hilltop site just outside Huntsville, Arkansas, he built a cozy house and a small shop. In the seven years since, both have grown, even to include a shop for Sue Jo, who paints and sells primitive decoys to shops and collectors across the country.

When we visited Jim, 41, and Sue Jo, 39, they showed us how and why their business matured. Now we know the reason customers from far and near cart their heirloom chairs, tired tables, and estate-auction finds to the Watsons' Ozark enterprise: They want quality craftsmanship.

A man and his tools work at building a reputation

Even on the Ozark ridges, Jim Watson classifies as a mountain of a man. His 6'6" frame fills the shop doorway when greeting customers who drop by. Large, muscular hands firmly grasp the furniture they bring to him. Jim handles each piece gently, though, as he would a baby. He draws the sad-looking piece to him, then guards it on the way to its resting place in the stack of furniture of similar ilk awaiting his careful attention.

"I like to pull something back, to make a beautiful piece of furniture out of a thing that looked terrible," Jim explains, almost apologizing for his caring. "Sorry, inexpensive furniture is a dime a dozen. But, if it's good wood, it's worth restorin'."

In Jim's workshop, even the crossbeams store tools. Not jigsaws, routers, or electric drills with dangling cords, though. It's hand, not power, tools that he keeps within easy reach.

"I used to go around and buy old tools, then restore them for use," Jim explains. "Now, there are a lot more good new tools out there than when I started twenty years ago. But, I'm still not dependent on anyone to furnish me with a good tool. I've always made everything when I needed it, and if I can't find the right tool, I make it—a carving gouge, chisel, plane iron, or a special veneer cutter. It gives me a pretty good feeling to do that," adds the unassuming craftsman.

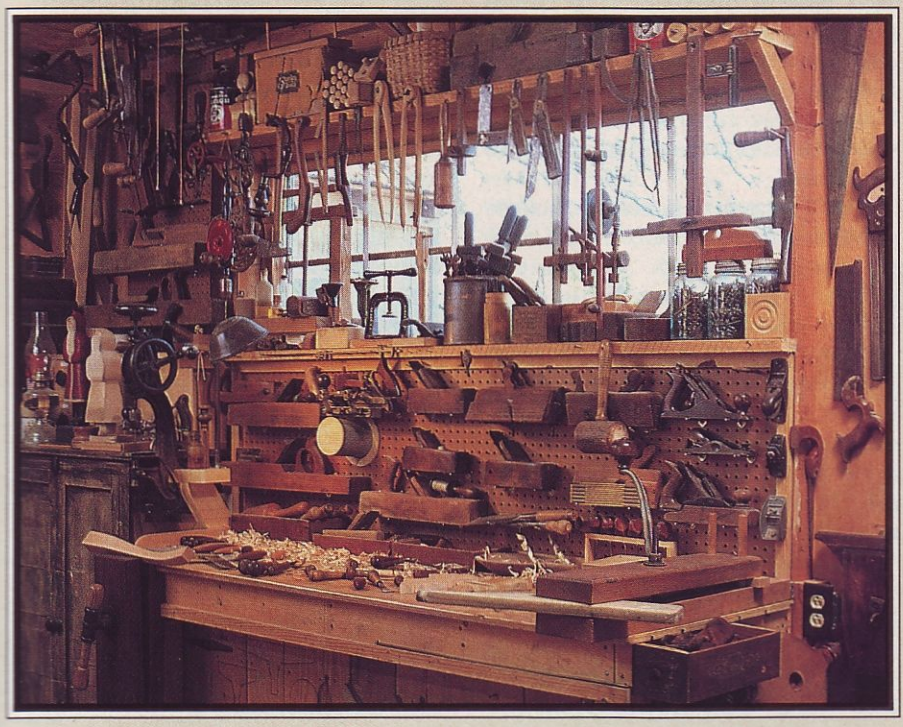

Jim's collection of refurbished hand tools aren't for display only. With them, he recreates the workmanship that matches old furniture.

Continued

GOOD WOOD IS WORTH RESTORIN'

To make tools and other items he needed, Jim long ago mastered the basics of blacksmithing. A small smithy attached to his main work space attests to his continuing interest.

There's another reason, besides self-sufficiency, why Jim relies a lot on hand tools. "Much of this old furniture was made with hand tools, and that adds to its beauty. You don't get the hand look with power tools," he claims.

"Oh yeah, I do all my roughing out with a bandsaw," Jim continues. "Or, I'll power-plane a board down within ⅛" of what I need. Then, I'll take an old hand plane to it the rest of the way. That's so I can leave those tiny plane marks in it. The piece will match the original parts, where some ol' fella did the same thing. You just can't get the same look with anything but a hand plane."

Then, in rugged contrast, comes the occasional piece of primitive furniture—rough stuff, made by pioneers when they needed it—that never saw a hand plane. "It's real interesting to restore a piece like that," he says, "but it's harder than making something new."

The furniture neatly stacked in the "receiving room" of Jim's shop hints that making wood look old may not only be harder, but also more time consuming. Jim looks over the armoires, desks, chairs, tables, and mirrors nestled together up to the eaves. "I'm behind," he says, shaking his head, "but I'm not behind because I'm slow. I'm willing to spend more time with it in my hands. I don't send out a piece unless I like it."

Getting down to the wood

Many people bring furniture to Jim for the same reason he began restoring nearly 20 years ago: They can't afford to buy new furniture of the same quality. Others, according to the craftsman, have acquired family heirlooms that need TLC, or purchased antiques at auction. "Some don't have any money in the item, others may have paid well, but they all understand that it will be worth more when I'm done," he says.

Although complete restoration represents the bulk of Jim's work, he gives quick face-lifts, too. "Occasionally, people drop off a piece for refinishing that actually doesn't need it," he says. "The joints are all solid, and maybe it's a little worn, but it doesn't need stripping—only a good cleaning."

JIM'S TOP 10 TIPS FOR TIRED FURNITURE

Furniture is part of everybody's life, and probably everybody has repaired some furniture," observes the brawny craftsman. "But, there's good and bad ways to repair."

Take nails, for a bad example. Jim hates them. "Nails don't belong in furniture," he says. "They're not even in my woodworking vocabulary. I use a screw if I need extra strength. Or a peg. Or a dowel. You can ruin a piece trying to get a nail out. With finishing nails, it's better to push them, then fill the holes."

Here are more of Jim's tips, focused on restoring and tempered with some of his philosophy:

- *In old furniture, use old wood.* "If I have to make a replacement piece, such as a stretcher or spindle in a chair, I make it from old furniture someone discarded. If I have to use new wood, I put it where it can be stained easily to blend in."
- *Don't remove parts that were handmade and replace them with machine-made parts.* "To the collector, that piece would be ruined. On the other hand, don't overwork [with hand tools such as a plane] a piece of wood that you're trying to make match. It's easy to get carried away, but you don't want to make more marks on the wood than the original piece would have had."
- *Don't take all the character away from a piece of old furniture by making it look too new.* "Fix the big cracks, gouges, burns, and stains, but leave the small things, like nicks and dents, that the wood acquired over the years."
- *Roll a spindle to break it loose.* "Got a loose spindle between chair legs, but it won't come out? Roll it back and forth between your fingers. The turning creates friction heat that will soften all the old glue."
- *Shim a spindle to fill the hole.* "After years of wear, the hole in the chair leg that the spindle fits into sometimes gets enlarged. To tighten the spindle, saw a slot in the tenon end and fill it with a thin wedge." See drawing, *below.*

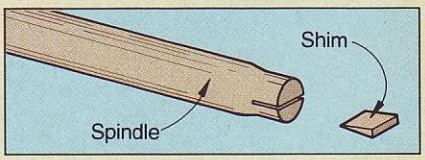

- *Scrape off all the old glue from joints.* "With a knife blade, clean out the old glue. But don't do anything that will remove more than the glue."
- *Lift old veneer with a table knife.* "It's the handiest tool. It slides right under the veneer [as shown in photo, opposite *above*].

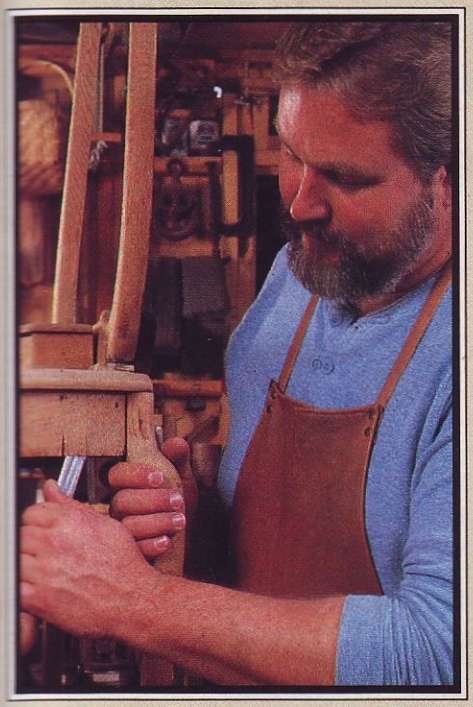

Jim carefully guides the blade of a bread knife under loose veneer to remove it.

The extent of the cleaning depends on the condition of the piece. "Often, I can just wash it down with water and Murphy's Oil Soap," Jim notes. "But, if it still looks dingy, say from built-up wax and polish, I go over it with fine steel wool dipped in mineral spirits. Even stronger is a mixture of three parts each of mineral spirits and boiled linseed oil to two parts each of vinegar and denatured alcohol. That really cuts, and softens up the original finish a bit so you can spread it around to recover blemishes."

Stripping furniture, of course, is a whole different ball game, and Jim has plenty of advice about the process. "First of all," he says, "I use a water-wash stripper. I don't dip-strip, either, except when furniture has many coats of paint on it. Dip-stripping is real hard on furniture. And, it has to be made of solid wood or it won't stand up. But, if you must take something for dip-stripping, count on taking it all apart first, if you can. Because if any of the joints are loose, they'll come apart anyway."

For those who don't mind stripping furniture, Jim has a couple of tips: "When you give $12 a gallon for stripper, you don't want most of it ending up on the ground. So, with a chair for instance, put a pan under each leg to collect the stripper. And remember, stripper evaporates quickly, but you have to keep the surface wet. Sprinkle a little sawdust on the stripper—make kind of a mush—to keep it working."

Written by Peter J. Stephano
Photographs: Bob Hawks

Then, work the knife slowly, prying up the veneer an inch or so at a time, not breakin' any."

- *Feather out a veneer patch.* "I patch old veneer with old veneer that I've salvaged, because it will be the same thickness. But, for a nearly invisible patch, instead of cutting the old veneer out and fitting in a patch of exactly the same shape, cut the patch slightly oversize. Then, sand down or feather the veneer surrounding the cutout. After you align the grain and glue down the patch, it will overlap the old veneer a bit [see drawing, *below*]. Clamp it tightly in place. After the glue dries, sand down the raised edges of the patch to make it flush."
- *Mend a break with wood.* "Most breaks on old furniture aren't fresh. The piece breaks again and again in the same place, taking off a little more wood each time. If you glue it, then add filler, the mend shows up. I mend it by shimming the crack with a piece of the same type of wood.

"With a veining tool, remove wood in a V-shaped groove right down the crack. Then, cut off a corner of a board of matching wood and glue it in the groove [see photo and drawing, *right*]. Clamp it in place, and sand it level when dry."

- *Don't sand too much.* "When you do have to use filler, don't oversand it. The filler gets slick and resists staining."

Jim could seemingly go on forever about working wood—and reworking old wood. That's because he never ceases to learn. "Between my metal work and my wood work, I pick up things all the time," he remarks. "And, because of that, I know what I'm doing won't ever get stale."

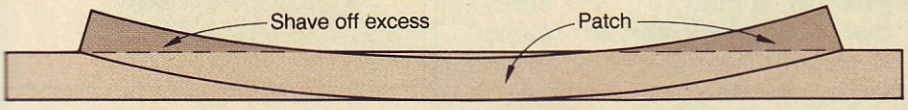

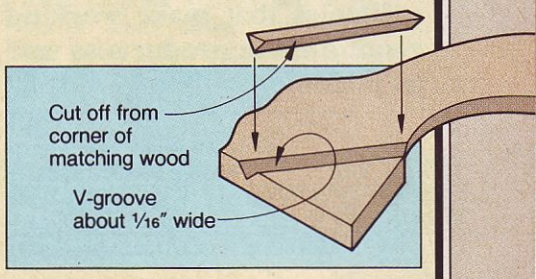

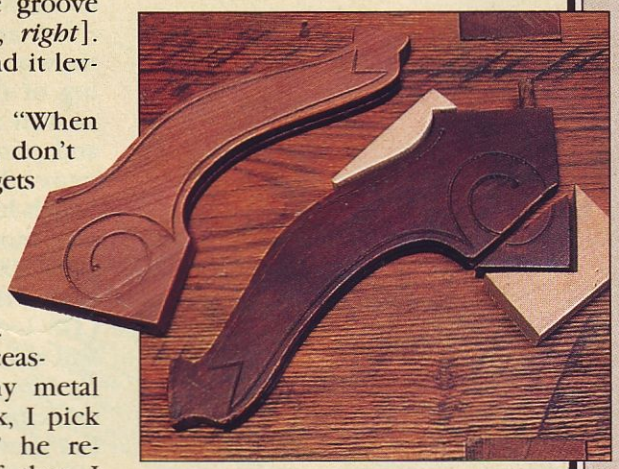

You can hardly detect the shimmed crack, illustrated in the drawing above, in the repaired table leg shown at top in the photo. For reliable, in-line clamping of irregularly shaped pieces like these, Jim lays out and cuts custom gluing jigs such as the ones of pine shown surrounding the lower leg.

BATTLING HARMFUL V

By now, most woodworkers have at least heard about the new, less-toxic finishing products available—water-based finishes, odorless strippers, and other "safe" materials. But chances are that you have an ample supply of less friendly finishes and solvents in your shop. You know, the ones that inflame your eyes and irritate your throat and nose. So what should you do? Start by reading this article. You'll learn how to determine which products pose the most danger to your health and the strategies that make working around these products as safe as possible.

THE ENVIRONMENT IT'S ALL WE HAVE

Introduce yourself to MSDS

Angela Babin, director of the Center for Safety in the Arts (CSA) in New York City, has the following recommendation. "When selecting wood finishes and paint removers," she says, "ask your dealer to see a copy of the Material Safety Data Sheet (MSDS) for each of them. Lacquers, varnishes, thinners, and products like these all have different formulations. When you request the MSDSs, you can choose the safest one."

Retail outlets, including home centers and hardware stores, have the government-required MSDSs available, or they can obtain them in a day or two. However, retailers don't normally have MSDSs in quantities to hand out because the goverment requires only business users to have them.

And, it's a good idea to obtain MSDSs for products that you may already have at home, too. Just contact the dealer that carries those brands to see if they have the appropriate MSDS, then drop by and inspect it. Or, request one from the manufacturer, whose address usually appears on the label.

On an MSDS, such as the one shown *opposite,* you'll find a listing of the hazardous ingredients, as well as emergency information and phone numbers, spill or leak procedure instructions, and health-hazard data. In addition—and most important—each product's MSDS carries a toxicity indicator—the *threshold limit value* (TLV) of its primary chemical—and maximum exposure time. Remember, MSDSs from different manufacturers never look alike, but they always carry this info.

TLV numbers for specific chemicals indicate the levels of airborne contaminants, stated in parts per million (e.g. 350 ppm), *that most people can be exposed to without adverse effects.* They're set by the American Conference of Governmental Industrial Hygienists (ACGIH) for a long list of common chemical ingredients. (On the MSDS shown *below right,* Borden has also listed a TLV published by OSHA for acetone.) Here's how to interpret TLVs:

500-plus ppm: Slightly toxic
100–500 ppm: Moderately toxic
Fewer than 100 ppm: Highly toxic

Remember that—contrary to what you usually encounter—TLVs of the *lower* numbers are the most dangerous. The smaller the number, the greater the potency!

Work without a noseful: Bring in fresh air

According to Michael McCann, executive director of the CSA and coworker with Babin, air contaminated by chemical vapors can be disposed of in one of two ways. Commercial shops that generate high concentrations of toxic materials in their shop air require *local exhaust ventilation,* such as a

A SIMPLE-TO-BUILD BASEMENT VENTILATOR

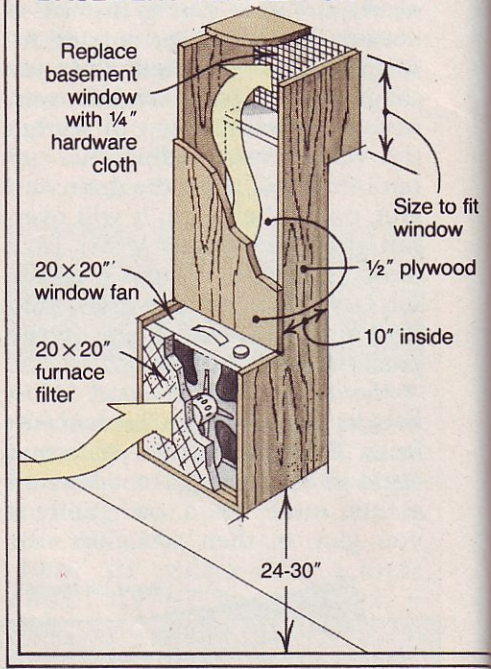

VAPORS Strippers, solvents, and finishes giving you a noseful? Here's help!

separate spray booth with a hood, an air cleaner, and a fan, for spraying and dust removal. Most home woodworkers, however, can successfully maintain a clean-air situation in their work space with *dilution ventilation.*

Dilution ventilation simply means that you bring in a large volume of clean air to reduce the concentration of toxic material, then remove the air. The simplest form of dilution ventilation is a wide-open window at one end of the room and another open window or door opposite.

Even better dilution ventilation requires the use of a fan or fans to move a volume of air through the work area. "It's important," says McCann, "that clean air come past your face, get contaminated, then be exhausted. That's crucial." Place yourself as shown *below,* when working with toxic vapors.

You can also add effectiveness to your dilution ventilation system by building the setup illustrated in the detail drawing, *below left.* The working-level exhaust constantly draws in fresh air and mixes it with the toxic vapors to keep the concentration low. (Note: This do-it-yourself exhaust system is *not* designed to substitute for a spray booth.)

How do you know if you're getting adequate ventilation? Says McCann, "If you can smell vapors throughout the house, you're not exhausting enough air."

Protect yourself somehow

If you find it impossible to provide sufficient dilution ventilation in your traditional shop area when doing certain tasks—such as stripping or applying heavy-duty contact adhesive—then move the work to another location, preferably outdoors. "Another alternative," says the CSA's Babin, "is to 'sectionalize' a project that exceeds your ventilation capacity." For example, instead of brushing on sealer or varnish to the entire surface of a large piece of furniture—for instance, a bureau—apply finish to the trim at one session, the front of one drawer at a later time, and so on until it's completed. That way, your exposure will be limited.

In all situations, you can protect yourself from inhaling harmful vapors by using a dust-and-mist type respirator labeled "NIOSH/MSHA Approved for Organic Vapors." Complete with a pair of canisters, it costs about $35. (Read about how to buy approved masks in the January 1991 issue of *WOOD®* magazine.)

WANT TO KNOW MORE?
VENTILATION, 118 pp., $11.95 (U.S.) ppd. Includes designs for a local exhaust system and a spray booth, from: Center for Safety in the Arts, 5 Beekman Street, New York, NY 10038.

Written with George Bransberg
Drawings: Kim Downing

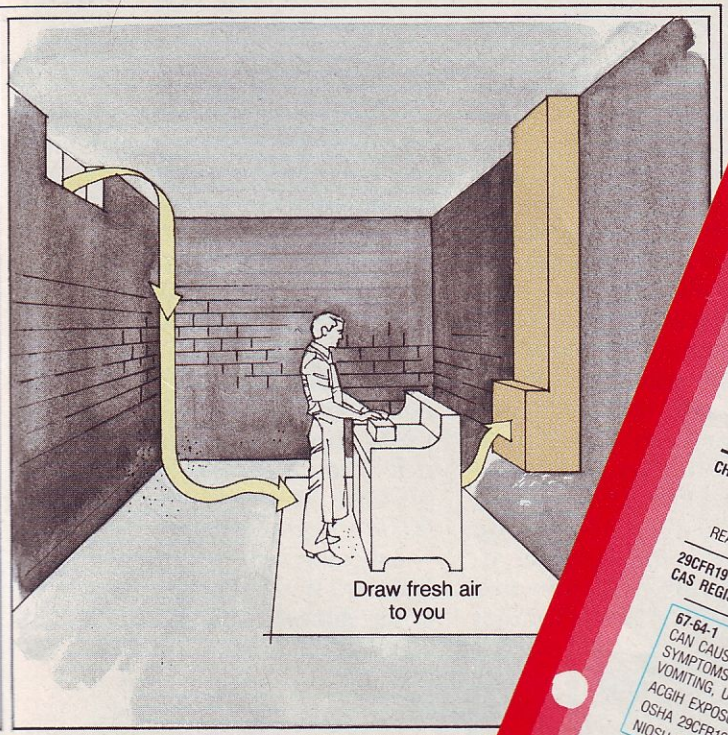

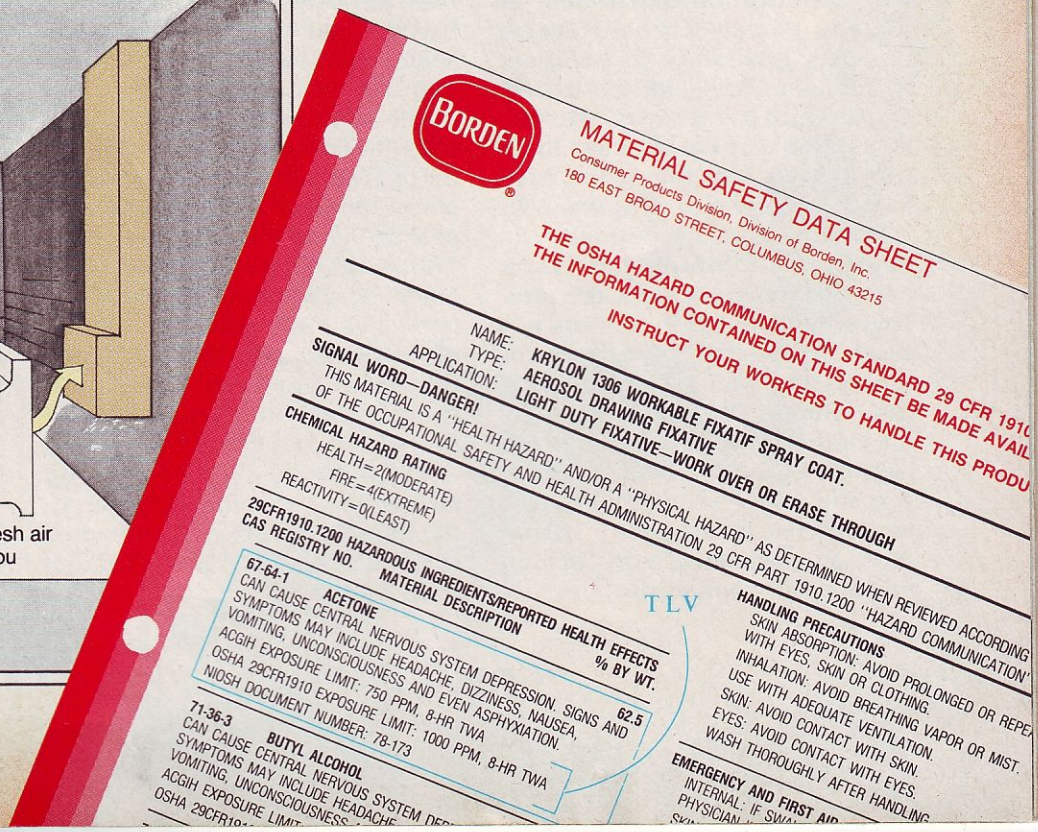
BORDEN
MATERIAL SAFETY DATA SHEET
Consumer Products Division, Division of Borden, Inc.
180 EAST BROAD STREET, COLUMBUS, OHIO 43215
THE OSHA HAZARD COMMUNICATION STANDARD 29 CFR 1910
THE INFORMATION CONTAINED ON THIS SHEET BE MADE AVAIL
INSTRUCT YOUR WORKERS TO HANDLE THIS PRODU
NAME: KRYLON 1306 WORKABLE FIXATIF SPRAY COAT.
TYPE: AEROSOL DRAWING FIXATIVE
APPLICATION: LIGHT DUTY FIXATIVE—WORK OVER OR ERASE THROUGH
SIGNAL WORD—DANGER!
THIS MATERIAL IS A "HEALTH HAZARD" AND/OR A "PHYSICAL HAZARD" AS DETERMINED WHEN REVIEWED ACCORDING
OF THE OCCUPATIONAL SAFETY AND HEALTH ADMINISTRATION 29 CFR PART 1910.1200 "HAZARD COMMUNICATION"
CHEMICAL HAZARD RATING
HEALTH=2(MODERATE)
FIRE=4(EXTREME)
REACTIVITY=0(LEAST)
29CFR1910.1200 HAZARDOUS INGREDIENTS/REPORTED HEALTH EFFECTS
CAS REGISTRY NO. MATERIAL DESCRIPTION % BY WT. TLV
67-64-1 ACETONE 62.5
CAN CAUSE CENTRAL NERVOUS SYSTEM DEPRESSION. SIGNS AND
SYMPTOMS MAY INCLUDE HEADACHE, DIZZINESS, NAUSEA,
VOMITING, UNCONSCIOUSNESS AND EVEN ASPHYXIATION.
ACGIH EXPOSURE LIMIT: 750 PPM, 8-HR TWA
OSHA 29CFR1910 EXPOSURE LIMIT: 1000 PPM, 8-HR TWA
NIOSH DOCUMENT NUMBER: 78-173
71-36-3 BUTYL ALCOHOL
CAN CAUSE CENTRAL NERVOUS SYSTEM DE
SYMPTOMS MAY INCLUDE HEADACHE
VOMITING, UNCONSCIOUSNESS
ACGIH EXPOSURE LIMI
OSHA 29CFR10
HANDLING PRECAUTIONS
SKIN ABSORPTION: AVOID PROLONGED OR REPE
WITH EYES, SKIN OR CLOTHING.
INHALATION: AVOID BREATHING VAPOR OR MIST.
USE WITH ADEQUATE VENTILATION.
SKIN: AVOID CONTACT WITH SKIN.
EYES: AVOID CONTACT WITH EYES.
WASH THOROUGHLY AFTER HANDLING
EMERGENCY AND FIRST AID
INTERNAL: IF SWA
PHYSICIAN
SKI

CARVE A SANTA

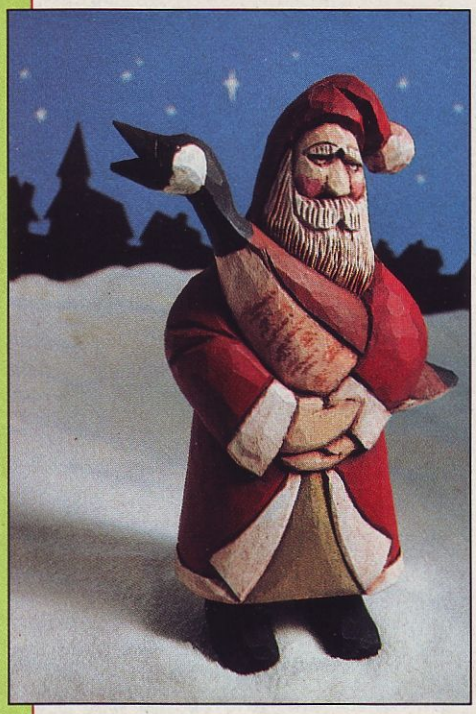

Georgia carver Ron Ransom says "Happy Holidays" with this country Claus

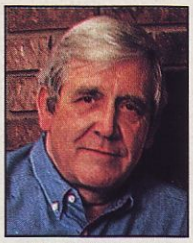

Ron Ransom

When Ron Ransom first picked up a carving knife 11 years ago, he had no idea what it would lead to. "I carved plaques in relief, then shore- and songbirds, and even tried a duck decoy or two," recalls Ron. "Then, a couple of years back, I carved a Santa for my wife, Evelyn. While I was at it, I made a few more and took them to a craft show. Holy cow, they all sold!"

Since then, the Marietta, Georgia, carver has focused on what he calls "Old World Santas." And, now he has dozens of designs.

Getting Santa started

For Ron's Santa, you'll need a piece of basswood measuring 2×4¾×7¼" and a carving knife. Transfer the outline from the pattern onto the wood and bandsaw the figure to shape. Then, begin rounding the edges.

Next, draw in the lines for the face, hands, goose, and other details on the front. (The nearly flat back has only the continuation of the coat's trim and grooves separating the arms from the body.)

Now, start making stop cuts about ⅛" deep along the lines you drew. Then, lay your blade against the wood and cut to the lines.

Avoiding a break

"My Santas don't always have roly-poly faces," Ron comments, "but the features are rounded. The challenge is avoiding a square face." For definition, cut a line at least 1/16" deep to separate the cheeks and nose from the beard.

"For each eye, just leave a rounded area of wood the size of a pinhead," Ron advises, "then highlight them later with paint. For his beard, cut a series of grooves to varying depths."

Because the grain in your figure runs vertically, the carver cautions against accidentally breaking off the goose's head. "Don't try to carve its neck round and slender," Ron says. "Leave it a little wide."

Now, add the look of ages

Ron never sands the wood, but goes right to the painting. For this Santa, Ron applied acrylic paints in black, white, flesh, red, brown, and a metallic gold.

To give his Santas the antique look, Ron coats the painted figure with Griffin dark brown paste shoe polish ("Other brands give a purple tint"). He buffs the dry polish with a soft shoe brush, then lightens the fur and face by rubbing with neutral shoe polish. Enough brown will remain to give Santa a patina.

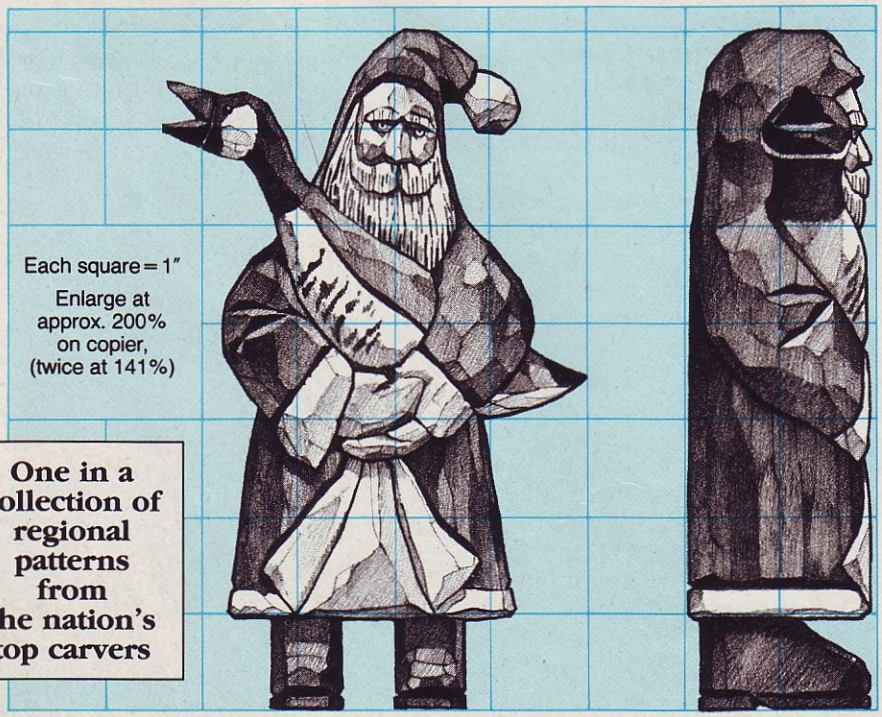

Each square = 1"

Enlarge at approx. 200% on copier, (twice at 141%)

One in a collection of regional patterns from the nation's top carvers

For a full-sized pattern, send $1 (U.S.) and a self-addressed, stamped, business-sized envelope to:
COUNTRY CLAUS
WOOD® Magazine
Box 11454
Des Moines, IA 50336-1454. (Foreign readers: Include an intl. reply coupon.)

Illustration: Jim Stevenson Photograph: Hopkins Associates

Woodcarving Art 1991 Wall Calendar

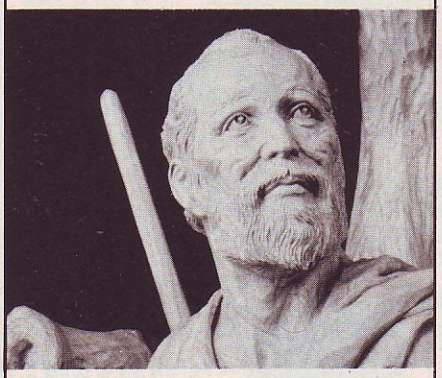

A large 11" x 25" wall calendar featuring 13 FULL COLOR and 12 Black & White photos of some of the best woodcarvings done in North America today! Includes a biography of each artist and tells where to find woodcarvings and woodcarving information. $9.95 plus $2.00 for shipping. A GREAT GIFT IDEA!

Satisifaction guaranteed!

WOODCARVING ART
P.O. Box 336C
Whitewater, WI 53190

UNBEATABLE PRICES ON PREMIUM TOOLS

10" Benchtop Bandsaw **$129.95**

Upper & Lower blade guides w/ bearing wheels for maximum stability.
#20-210

1"x30 Benchtop Belt Sander **$64.95**

Balanced 3-Wheel belt system for even sanding.
#35-130

10" Motorized Benchtop Table Saw **$149.00**

Heavy Duty cast aluminum table.
#30-310

8" 5 Speed "Mini" Benchtop Drill Press #60-085	$119.00
15" Benchtop Scroll Saw #25-215	$99.95
4"x36" Belt / 6" Sander #35-406	$139.95
10" Motorized Miter Saw #10-100C	$209.95
12" Benchtop Planer #50-120	$379.00
6" Bench Grinder #15-220	$39.99
10" 40 Tooth Carbide Blade #30-32010	$11.50

FREE FREIGHT ON ALL ORDERS
Dealer inquiries invited. In Kansas add 5.85% sales tax.

MasterCard VISA

Phone in your Visa or Mastercard orders.
800-593-TOOL
Or write:

SELECTOOLS, INC.
P.O. Box 15511 • Lenexa, KS 66215

NU-MARK

SHOP SENSE

TUNE IN TO WORKSHOP CONSCIOUSNESS

Have you ever noticed that on some days everything goes perfectly when you're working in the shop? Then, at other times, you can't seem to do anything right? Here's how to avoid those not-so-good experiences, especially with the holidays coming up.

What mood you're in has a lot to do with the effectiveness and efficiency with which you accomplish things, in the woodshop as well as anywhere else. And, there's a bunch of factors that can affect your work:

- *Fatigue dulls your senses, making it difficult to concentrate or to work at peak efficiency.* If you're driven to do something, limit your activities to the uncomplicated, such as finish-sanding.
- *Emotional stress directs your mind away from the task at hand, preferring instead to dwell on what's causing it.* Focusing attention on your work becomes impossible. Some woodworking activities, such as carving, can help you wind down. Really upset? Stay out of the shop.
- *Numbed senses have no place in the shop.* Never attempt woodworking when you're under the influence of alcohol or drugs (even medicine that makes you drowsy). Anything that impedes your judgement or response time will directly affect your ability to work *and* your safety.
- *Distractions pull your attention away from tasks and procedures that require your total concentration.* That's why it's wise to post the shop "off limits" to the uninvolved. Teach children, for instance, that the shop isn't a play area. Instead, involve them in shop activities, but make certain that they follow strict safety rules. A shop isn't a kennel, either. Maintain strict control over your pets. An eager puppy underfoot could cause a nasty accident.
- *Fear of either machine or tool prevents you from operating it safely.* On the other hand, overconfidence begs for trouble, too. So, learn how to safely operate a machine, then always respect it.

How to make things go right

Good planning plays an important role in getting everything running smoothly in your shop. You can't help but feel frustrated if you're constantly backtracking due to forgetfulness. But, rushing a job can be equally bad.

Your work speed relates directly to your experience. For that reason, there's a limit to how quickly you can work without affecting performance. Machines, too, have their limits. For instance, there's a limit to how fast you can feed a saw blade without lowering the quality of the cut or risking an accident.

So, be sensible. Don't set unrealistic goals for what you can accomplish in one session. And, do the work in carefully thought-out stages. (Write down a plan of attack to get organized.) Then, your thoughts and actions will come together in what some woodworkers call "workshop consciousness." That's when you feel familiar tools responding, when you get a rush of exultation as a difficult joint slips together, and you have a sense of accomplishment as a project becomes reality. And, that's really what woodworking is all about.

Illustration: Jim Stevenson